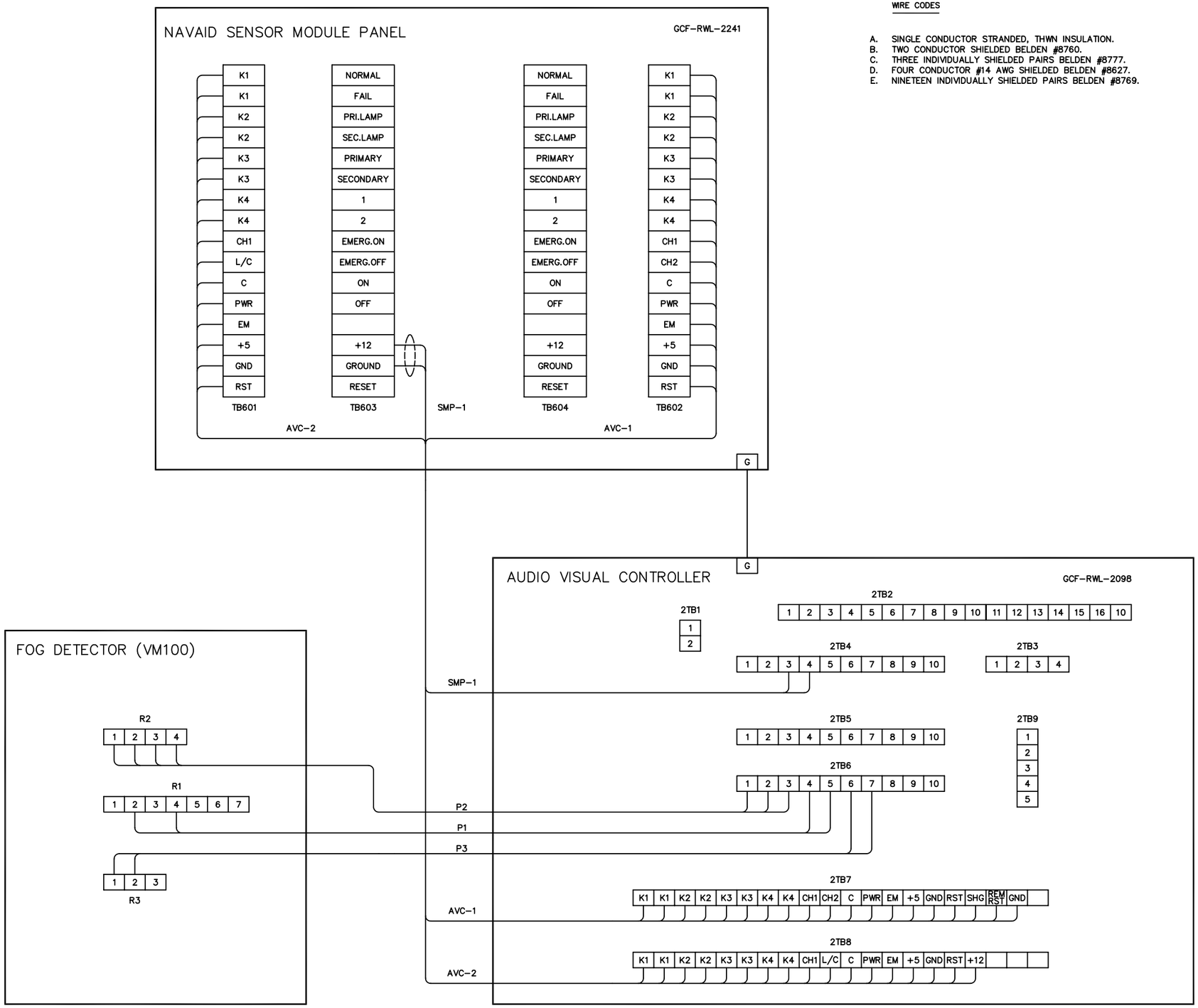

WIRE CODES

A. SINGLE CONDUCTOR STRANDED, THWN INSULATION.
B. TWO CONDUCTOR SHIELDED BELDEN #8760.
C. THREE INDIVIDUALLY SHIELDED PAIRS BELDEN #8777.
D. FOUR CONDUCTOR #14 AWG SHIELDED BELDEN #8627.
E. NINETEEN INDIVIDUALLY SHIELDED PAIRS BELDEN #8769.

POINT TO POINT WIRE RUNNING LIST

FROM	WIRE SIZE (AWG)	WIRE CODE	CABLE DESIGNATION	TO
AVC, 2TB8-K1	22	E	AVC-2	NVSP, TB601-K1
AVC, 2TB8-K1	22	E	AVC-2	NVSP, TB601-K1
AVC, 2TB8-K2	22	E	AVC-2	NVSP, TB601-K2
AVC, 2TB8-K2	22	E	AVC-2	NVSP, TB601-K2
AVC, 2TB8-K3	22	E	AVC-2	NVSP, TB601-K3
AVC, 2TB8-K3	22	E	AVC-2	NVSP, TB601-K3
AVC, 2TB8-K4	22	E	AVC-2	NVSP, TB601-K4
AVC, 2TB8-K4	22	E	AVC-2	NVSP, TB601-K4
AVC, 2TB8-CH1	22	E	AVC-2	NVSP, TB601-CH1
AVC, 2TB8-L/C	22	E	AVC-2	NVSP, TB601-L/C
AVC, 2TB8-C	22	E	AVC-2	NVSP, TB601-C
AVC, 2TB8-PWR	22	E	AVC-2	NVSP, TB601-PWR
AVC, 2TB8-EM	22	E	AVC-2	NVSP, TB601-EM
AVC, 2TB8-+5	22	E	AVC-2	NVSP, TB601-+5
AVC, 2TB8-GND	22	E	AVC-2	NVSP, TB601-GND
AVC, 2TB8-RST	22	E	AVC-2	NVSP, TB601-RST
AVC, 2TB7-K1	22	E	AVC-1	NVSP, TB602-K1
AVC, 2TB7-K1	22	E	AVC-1	NVSP, TB602-K1
AVC, 2TB7-K2	22	E	AVC-1	NVSP, TB602-K2
AVC, 2TB7-K2	22	E	AVC-1	NVSP, TB602-K2
AVC, 2TB7-K3	22	E	AVC-1	NVSP, TB602-K3
AVC, 2TB7-K3	22	E	AVC-1	NVSP, TB602-K3
AVC, 2TB7-K4	22	E	AVC-1	NVSP, TB602-K4
AVC, 2TB7-K4	22	E	AVC-1	NVSP, TB602-K4
AVC, 2TB7-CH1	22	E	AVC-1	NVSP, TB602-CH1
AVC, 2TB7-CH2	22	E	AVC-1	NVSP, TB602-CH2
AVC, 2TB7-C	22	E	AVC-1	NVSP, TB602-C
AVC, 2TB7-PWR	22	E	AVC-1	NVSP, TB602-PWR
AVC, 2TB7-EM	22	E	AVC-1	NVSP, TB602-EM
AVC, 2TB7-+5	22	E	AVC-1	NVSP, TB602-+5
AVC, 2TB7-GND	22	E	AVC-1	NVSP, TB602-GND
AVC, 2TB7-GND	22	E	AVC-1	NVSP, TB602-RST
AVC, 2TB4-4	18	B	SMP-1,B	NVSP, TB603-+12VDC
AVC, 2TB4-3	18	B	SMP-1,B	NVSP, TB603-GROUND
AVC, 2TB4-10		B	SMP-1,SHIELD	NO CONNECTION
AVC, CASE GND	12	A	SMP-1,BARE/GRN	NVSP, CASE GROUND
FD, R1-2	18		P1	AVC, 2TB6-4
FD, R1-4	18		P1	AVC, 2TB6-5
FD, R2-1	18		P2	AVC, 2TB6-2
FD, R2-3	18		P2	AVC, 2TB6-3
FD, R2-2	18		P2	AVC, 2TB6-1
FD, R2-4	18		P2	AVC, 2TB6-3
FD, R3-1	18		P3	AVC, 2TB6-7
FD, R3-2	18		P3	AVC, 2TB6-6

REV.	DATE	APPR.	DESCRIPTION	BY
B	10/95	RA / HRC	REPLACE VIDEOGRAPH B WITH VM100 FOG DETECTOR.	STN
A	8/91	HRC	LOCAL EARTH GROUND FOR FOG DETECTOR, CASE GROUNDS FOR NASP AND AVC. REROUTE SWP-1 TO 2TB4-4 AND 2TB4-3.	STN

DESIGNED: RAD
DRAWN: APJ
TRACED:
CHECKED: RAD
REVIEWED BY: P. HAWKINS
G-EOE-3A
REVIEWED BY: H. R. CLEVELAND
G-EOE-3C
REVIEWED BY: C. W. SCHECK
G-EOE-3

U.S. COAST GUARD HEADQUARTERS
CIVIL ENGINEERING

STANDARD AID TO NAVIGATION
AUDIO VISUAL CONTROLLER, NAVAID SENSOR MODULE PANEL, AND FOG DETECTOR

APPROVED: K. D. URFER
CHIEF, CIVIL ENGINEERING DIVISION
DATE 10-12-77

UNLESS OTHERWISE SPECIFIED:
ALL DIMENSIONS ARE IN INCHES.
TOLERANCES: DIM.
ANG.

DRAWING NUMBER 130414 REV. B
SCALE: NONE SHEET 1 OF 1

PLOTTING SCALE: