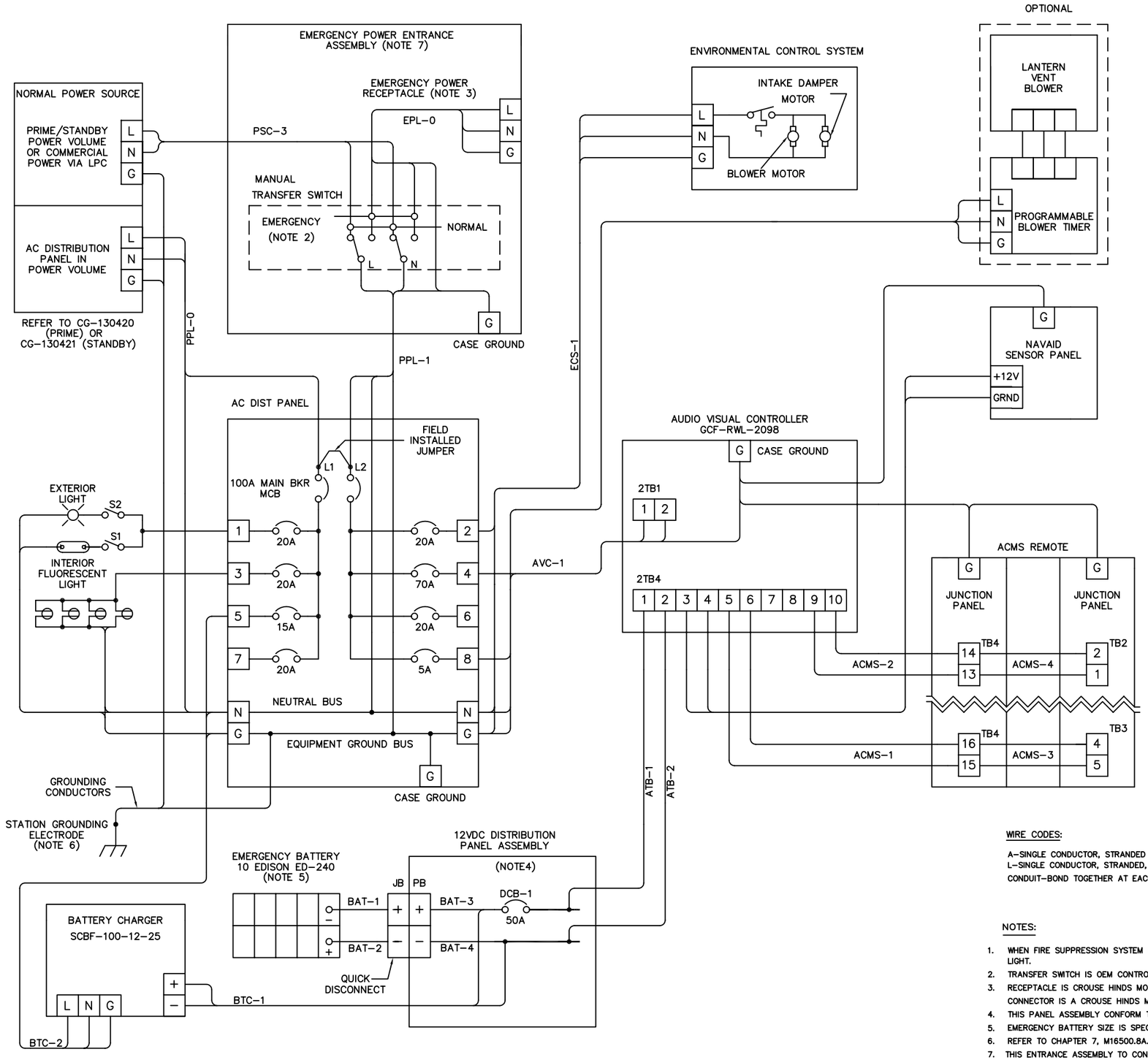

POINT TO POINT WIRE RUNNING LIST

FROM	WIRE SIZE (AWG)	WIRE CODE	CABLE DESIGNATION	TO
AUDIO VISUAL CONTROLLER, 2TB4-5	12	A	ACMS-1A	JUNCTION PANEL, TB4-15
AUDIO VISUAL CONTROLLER, 2TB4-6	12	A	ACMS-1B	JUNCTION PANEL, TB4-16
AUDIO VISUAL CONTROLLER, 2TB4-9	12	A	ACMS-2A	JUNCTION PANEL, TB4-13
AUDIO VISUAL CONTROLLER, 2TB4-10	12	A	ACMS-2B	JUNCTION PANEL, TB4-14
ACMS PROCESSOR, TB3-5	12	A	ACMS-3A	JUNCTION PANEL, TB4-15
ACMS PROCESSOR, TB3-4	12	A	ACMS-3B	JUNCTION PANEL, TB4-16
ACMS PROCESSOR, TB2-1	12	A	ACMS-3A	JUNCTION PANEL, TB4-13
ACMS PROCESSOR, TB2-2	12	A	ACMS-3B	JUNCTION PANEL, TB4-14
AC DIST PANEL, MAIN CB L2, L SIDE	2	A	PPL-1A	MAN XFER SWITCH, LOAD SIDE L TERM
AC DIST PANEL, NEUTRAL BUS	2	A	PPL-1B	MAN XFER SWITCH, LOAD SIDE N TERM
AC DIST PANEL, EQUIP GRD BUS	6	A	PPL-1C	MAN XFER SW, GRD TERM(EMG PWR ENT ASY)
EMERG PWR RECEPTACLE, L TERM	2	A	EPL-0A	MAN XFER SW, EMERG L TERM
EMERG PWR RECEPTACLE, N TERM	2	A	EPL-0B	MAN XFER SW, EMERG N TERM
EMERG PWR RECEPTACLE, G TERM	2	A	EPL-0C	MAN XFER SW, EMERG G TERM(EMD PWR ENT ASY)
NORMAL PWR SOURCE, LINE	2	A	PSC-3A	MAN XFER SW, NORMAL L TERM
NORMAL PWR SOURCE, NEUTRAL	2	A	PSC-3B	MAN XFER SW, NORMAL N TERM
NORMAL PWR SOURCE, GROUND	6	L		MAN XFER SW, STATION GRD ELECTRODE
AC DIST PANEL, MAIN CB L1, L SIDE	2	A	PPL-0A	AC DIST PANEL IN PWR VOL, L TERM
AC DIST PANEL, NEUTRAL BUS	2	A	PPL-0B	AC DIST PANEL IN PWR VOL, N TERM
EMERG BATTERY, BATT POST(+)	6	A	BAT-1	QUICK DISCONNECT, QD IN SOCKET(+)
EMERG BATTERY, BATT POST(-)	6	A	BAT-2	QUICK DISCONNECT, QD IN SOCKET(-)
QUICK DISCONNECT, QD PB(+)	6	A	BAT-3	DC DIST PANEL, DCB-1 (L SIDE)
QUICK DISCONNECT, QD PB(-)	6	A	BAT-4	DC DIST PANEL, DC BUS(-)
DC DISTRIBUTION PANEL, (+)BUS	6	A	ABT-1	AUDIO VISUAL CONTROLLER, 2TB4-1
DC DISTRIBUTION PANEL, (-)BUS	6	A	ABT-2	AUDIO VISUAL CONTROLLER, 2TB4-2
PWR DISTRIBUTION PANEL, CB #4	4	A	AVC-1A	AUDIO VISUAL CONTROLLER, 2TB1-2
PWR DIST PANEL, NEUTRAL BUS	4	A	AVC-1B	AUDIO VISUAL CONTROLLER, 2TB1-1
PWR DIST PANEL, GROUND BUS	8	A	AVC-1C	AUDIO VISUAL CONTROLLER, CASE GROUND
BATTERY CHARGER, (+)OUTPUT	8	A	BTC-1A	DC DIST PANEL, DCB-1(LINE SIDE)
BATTERY CHARGER, (-)OUTPUT	8	A	BTC-1B	DC DIST PANEL, DC BUS(-)
AC DIST PANEL, CB #5	14	A	BTC-2A	BATTERY CHARGER, AC LINE INPUT
AC DIST PANEL, NEUTRAL BUS	14	A	BTC-2B	BATTERY CHARGER, AC NEUTRAL INPUT
AC DIST PANEL, GROUND BUS	14	A	BTC-2C	BATTERY CHARGER, GROUND
PWR DISTRIBUTION PANEL, CB #2	12	A	ECS-1A	ENVIRON CONTROL SYSTEM, LINE INPUT
PWR DIST PANEL, NEUTRAL BUS	12	A	ECS-1B	ENVIRON CONTROL SYSTEM, NEUTRAL INPUT
PWR DIST PANEL, GROUND BUS	12	A	ECS-1C	ENVIRON CONTROL SYSTEM, FRAME GROUND
NASP CASE GROUND	12	A	BARE/GRD	AVC CASE GROUND
AVC CASE GROUND	12	A	BARE/GRD	JUNCTION PANEL CASE GROUND
NASP CASE GROUND	12	A	BARE/GRD	JUNCTION PANEL CASE GROUND

WIRE CODES:

A-SINGLE CONDUCTOR, STRANDED THWN INSULATION
L-SINGLE CONDUCTOR, STRANDED, BARE, NO 6, IN 3/4
CONDUIT-BOND TOGETHER AT EACH END

NOTES:

1. WHEN FIRE SUPPRESSION SYSTEM IS REMOVED, CONNECT 24VDC TO LPC STATUS LIGHT.
2. TRANSFER SWITCH IS OEM CONTROLS, INC. MODEL #VN100-2.
3. RECEPTACLE IS CROUSE HINDS MODEL RPC-733-006-S12AT. THE MATING CABLE CONNECTOR IS A CROUSE HINDS MODEL RPC-533-153-P12AT.
4. THIS PANEL ASSEMBLY CONFORM TO DRAWING 130913.
5. EMERGENCY BATTERY SIZE IS SPECIFIED IN CHAPTER 3, M16500.8A.
6. REFER TO CHAPTER 7, M16500.8A.
7. THIS ENTRANCE ASSEMBLY TO CONFORM TO DRAWING 130914.

REV.	DATE	APPR.	DESCRIPTION	BY
D			REMOVE RADIOBEACON, HALON SYSTEMS.	
C	12/91	HRC	REMOVE BONDING JUMPER. SHOW ACMS VS RCMS, JUNCTION PANEL, PWR FEED TO NASP. ADD CASE GRNDS FOR JUNCTION PANEL, ACMS AND NASP.	STN
B	1/87	HRC	ADD AC DIST PANEL OF PWR VOL, CLARIFY PSC-3, PPL-0, PPL-1. ERASE CONNECTION TO CB8. CHANGE NAME OF FIRE SUP LINE TO FSS-11. CHANGE CB6 TO 20A AND REVISE NOTE 1. UPDATE RADIOBEACON SYSTEM TO NX SERIES. ADD ADDITIONAL LANTERN VENT BLOWER AT CB8.	KA
A	4/77	HRC	CORRECT GROUNDING CONNECTIONS.	RAD

DESIGNED: RAD
DRAWN: AJ
TRACED:
CHECKED: R.A.DOUGHTY
REVIEWED BY: P.HAWKINS
CH ELECT SECT
REVIEWED BY: H.R.CLEVELAND
CH SYS SECT
REVIEWED BY: C.W.SCHECK
CH SUP EQ BR

U.S. COAST GUARD HEADQUARTERS
OCEAN ENGINEERING

STANDARD AID TO NAVIGATION POWER DISTRIBUTION FOR SIGNAL CONTROL SYSTEM INTERCONNECTING DIAGRAM

APPROVED: K. D. URFER
CHIEF OF DIVISION
DATE 11/15/76

UNLESS OTHERWISE SPECIFIED:
ALL DIMENSIONS ARE IN INCHES.
TOLERANCES: DIM.
ANG.

DRAWING NUMBER 130419 REV. D
SCALE: NONE SHEET 1 OF 1

PLOTTING SCALE: