NOTES:

1. USE ED-400 IF GREATER AUTONOMY IS NEEDED.
2. USE LOW VOLTAGE DROP KIT IF CAT V LOAD CENTER TO MAIN LIGHT RUN IS LONGER THAN 15 FEET AND LAMP IS 50 WATTS OR GREATER.
3. CAT V LOAD CENTER CIRCUIT BREAKER PROTECTION IS 20 AMPS.
4. ENSURE THE JUMPER J1 ON THE INTERFACE CARD IS IN POSITION 3 FOR NORMALLY OPEN CONTACTS. SEE INTERFACE CARD DIAGRAM, TECH MANUAL, NOV 97. K1 RELAY IS SHOWN IN LOW VISIBILITY POSITION; SIGNAL SOUNDS WHEN K1 CONTACT IS OPEN. RELAY K2 CONTACT TERMINALS NOT USED.
5. DO NOT UNDER ANY CIRCUMSTANCES SEND LOAD CURRENTS THROUGH VM100 K1 AND/OR K2 RELAY CONTACTS.

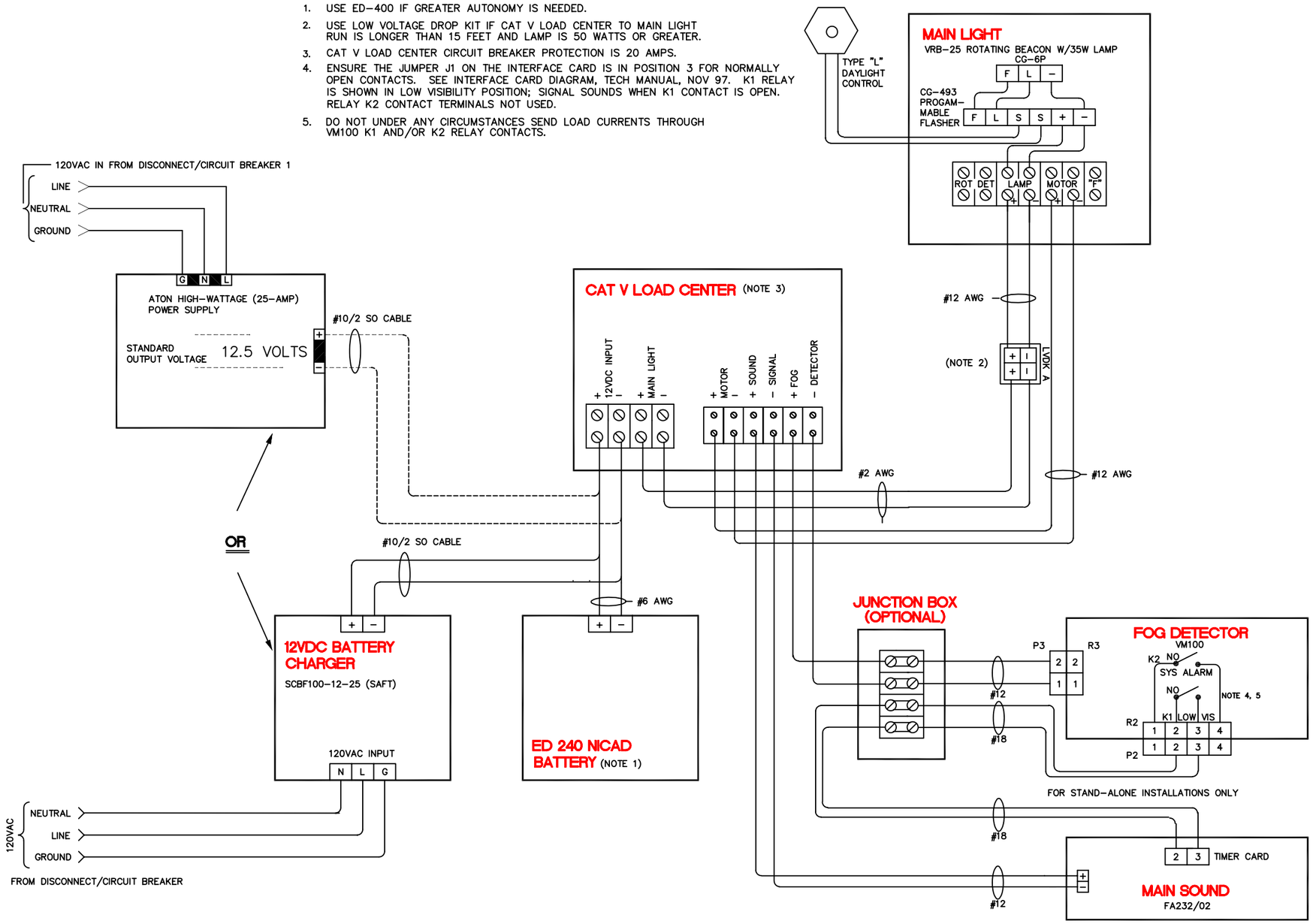

POINT TO POINT WIRE RUNNING LIST

FROM	WIRE SIZE (AWG)	WIRE CODE	TO
IF USING ATON POWER SUPPLY			
120VAC, BREAKER, LINE	12	C	ATON PWR SUPPLY, LINE
120VAC, NEUTRAL BUS	12	C	ATON PWR SUPPLY, NEUTRAL IN
120VAC, GROUND BUS	12	C	ATON PWR SUPPLY, CASE GRND
ATON PWR SUPPLY (+)	10	B	CAT V LOAD CENTER (+)
ATON PWR SUPPLY (-)	10	B	CAT V LOAD CENTER (-)
IF USING BATTERY CHARGER			
120VAC, BREAKER, LINE	12	C	BATT CHRGR, LINE IN
120VAC, NEUTRAL BUS	12	C	BATT CHRGR, NEUTRAL IN
120VAC, GROUND BUS	12	C	BATT CHRGR, CASE GRND
BATT CHRGR, 12VDC (+) OUT	10	B	LC 12VDC INPUT (+)
BATT CHRGR, 12VDC (-) OUT	10	B	LC 12VDC INPUT (-)
ED 240 NICAD BATT (+)	6	A	LC 12VDC INPUT (+)
ED 240 NICAD BATT (-)	6	A	LC 12VDC INPUT (-)
LC MAIN LIGHT (+)	12	B	VRB LAMP (+)
LC MAIN LIGHT (-)	12	B	VRB LAMP (-)
LC MOTOR (+)	12	B	VRB MOTOR (+)
LC MOTOR (-)	12	B	VRB MOTOR (-)
LC SOUND SIGNAL (+)	12	B	SOUND SIGNAL (+)
LC SOUND SIGNAL (-)	12	B	SOUND SIGNAL (-)
LC FOG DETECTOR (+)	12	B	FOG DETECTOR R3-2, VIA P3
LC FOG DETECTOR (-)	12	B	FOG DETECTOR R3-1, VIA P3
FOG DETECTOR, R2-2, VIA P2	18	B	MAIN SOUND, TIMER CARD, TERM #2
FOG DETECTOR, R2-3, VIA P2	18	B	MAIN SOUND, TIMER CARD, TERM #3

WIRE CODES:

A. SINGLE CONDUCTOR STRANDED, THWN INSULATION.
B. TWO CONDUCTOR STRANDED, TYPE SO CABLE
C. THREE CONDUCTOR STRANDED, THWN INSULATION

BILL OF MATERIALS

ITEM	TYPE	SOURCE OF SUPPLY
ATON POWER SUPPLY OR 12VDC BATTERY, NICAD 12VDC BATTERY CHARGER	HI-WATTAGE (25 AMP) OR ED 240 SCBF100-12-25	G-SEC-2 OR SAFT G-SEC-2
ROTATING BEACON, 12VDC	VRB-25	G-SEC-2
1/2-MILE SOUND SIGNAL	FA-232	API
PROGRAMMABLE FLASHER	CG-493	G-SEC-2
LAMPCHANGER	CG-6P	G-SEC-2
CAT V LOAD CENTER	LC-1	G-SEC-2
LOW VOLTAGE DROP KIT	LVDK	G-SEC-2
DAYLIGHT CONTROL	TYPE-L	ELC
FOG DETECTOR	VM100	G-SEC-2

REV.	DATE	APPR.	DESCRIPTION	BY
A	8/03	JTG	REPLACE 12VDC DISTRIBUTION PANEL WITH CATEGORY V LOAD CENTER, ADD FOG DETECTOR AND CORRECT R2 CONNECTIONS IN VM100, CHANGE VM100 P2/R2 CONNECTOR CONFIG., AND ADD OPTIONAL JUNCTION BOX.	KMD

DESIGNED: KMD
DRAWN: KMD
TRACED:
CHECKED: JG, CA
REVIEWED BY:
REVIEWED BY: H.R. CLEVELAND G-SEC-2A
REVIEWED BY: R.J. LEGIER G-SEC-2

U.S. COAST GUARD HEADQUARTERS
CIVIL ENGINEERING

STANDARD AID TO NAVIGATION
CAT V (120VAC)
BATTERY/BATTERY CHARGER/VRB-25
LIGHTHOUSE SYSTEM

APPROVED: J. A. RAUCH
CHIEF, OFFICE OF CIVIL ENGINEERING
DATE 7/31/97

UNLESS OTHERWISE SPECIFIED:
ALL DIMENSIONS ARE IN INCHES.
TOLERANCES: DIM.
ANG.

DRAWING NUMBER 130428 REV. A
SCALE: NONE SHEET 1 OF 1

PLOTTING SCALE: