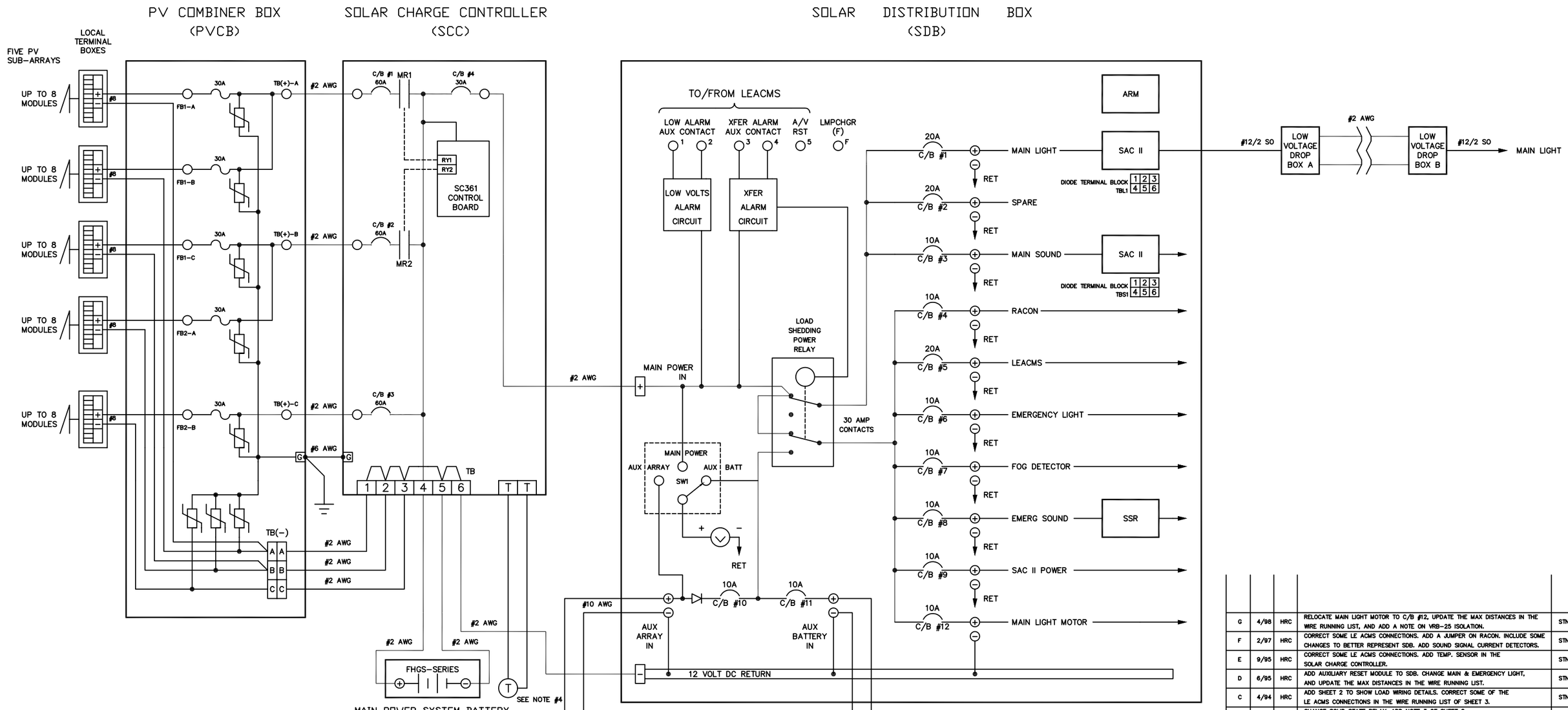

NOTES:

1. SEE SHEET 2 FOR WIRE RUNNING LIST, LOAD INTERCONNECTION, AND MATERIALS LIST.
2. REFER TO SHEET 3 FOR LOAD WIRING DETAILS.
3. THIS SYSTEM SHOULD BE TEMPORARILY ASSEMBLED AND TEST-OPERATED SUCCESSFULLY AT THE BASE PRIOR TO TRANSPORTING TO THE AID FOR PERMANENT INSTALLATION.
4. INSTALL CHARGE CONTROLLER TEMPERATURE COMPENSATION SENSOR ON SIDE OF MAIN BATTERY.
5. MAIN LIGHT MOTOR RELOCATED TO C/B #12 TO PREVENT SUN DAMAGE TO LAMPCHANGER DURING MAIN LIGHT OR MAIN POWER FAILURE. RELABEL C/B'S ACCORDINGLY.
6. WHEN VRB-25 ROTATING BEACON IS INSTALLED ON A STRUCTURE PRONE TO VIBRATION, EITHER DUE TO WIND, CURRENTS, ICE, OR A CO-LOCATED ELECTRONIC SOUND SIGNAL, IT IS NECESSARY TO INSTALL VIBRATION ISOLATION GROMMETS BETWEEN THE BEACON AND THE STRUCTURE (SEE TECHNICAL DATA SHEET TD-98-03 FOR MORE DETAILS).

REV.	DATE	APPR.	DESCRIPTION	BY
G	4/98	HRC	RELOCATE MAIN LIGHT MOTOR TO C/B #12, UPDATE THE MAX DISTANCES IN THE WIRE RUNNING LIST, AND ADD A NOTE ON VRB-25 ISOLATION.	STN
F	2/97	HRC	CORRECT SOME LE ACMS CONNECTIONS. ADD A JUMPER ON RACON. INCLUDE SOME CHANGES TO BETTER REPRESENT SDB. ADD SOUND SIGNAL CURRENT DETECTORS.	STN
E	9/95	HRC	CORRECT SOME LE ACMS CONNECTIONS. ADD TEMP. SENSOR IN THE SOLAR CHARGE CONTROLLER.	STN
D	6/95	HRC	ADD AUXILIARY RESET MODULE TO SDB. CHANGE MAIN & EMERGENCY LIGHT, AND UPDATE THE MAX DISTANCES IN THE WIRE RUNNING LIST.	STN
C	4/94	HRC	ADD SHEET 2 TO SHOW LOAD WIRING DETAILS. CORRECT SOME OF THE LE ACMS CONNECTIONS IN THE WIRE RUNNING LIST OF SHEET 3.	STN
B	4/93	HRC	CHANGE SOLID STATE RELAY. ADD NOTE 3 OF SHEET 2. SHOW RETURN CONNECTIONS FOR PV COMBINER BOX & CHARGE CONTROLLER. ADD RETURN BUS FOR SOLAR DISTRIBUTION BOX. ADD A DIODE.	STN
A	9/92	HRC	ADD TERMINAL ID. AND ADD SHEET 2.	STN

DESIGNED: HRC
DRAWN: STN/KA
TRACED:
CHECKED: JTG
REVIEWED BY: J.T. GRASSON
G-ECV-3C
REVIEWED BY: S.E. TRENCHARD
G-ECV-3
REVIEWED BY:

U.S. COAST GUARD HEADQUARTERS
CIVIL ENGINEERING

STANDARD AID TO NAVIGATION CATEGORY I SOLAR POWERED LIGHTHOUSE SYSTEM (REGULATED)

APPROVED: R.J. WELLS, P.E.
CHIEF, CIVIL ENGINEERING DIVISION
DATE 3-30-92

UNLESS OTHERWISE SPECIFIED:
ALL DIMENSIONS ARE IN INCHES.
TOLERANCES: DIM.
ANG.

DRAWING NUMBER 140410 REV. G
SCALE: NONE SHEET 1 OF 3

PLOTTING SCALE:

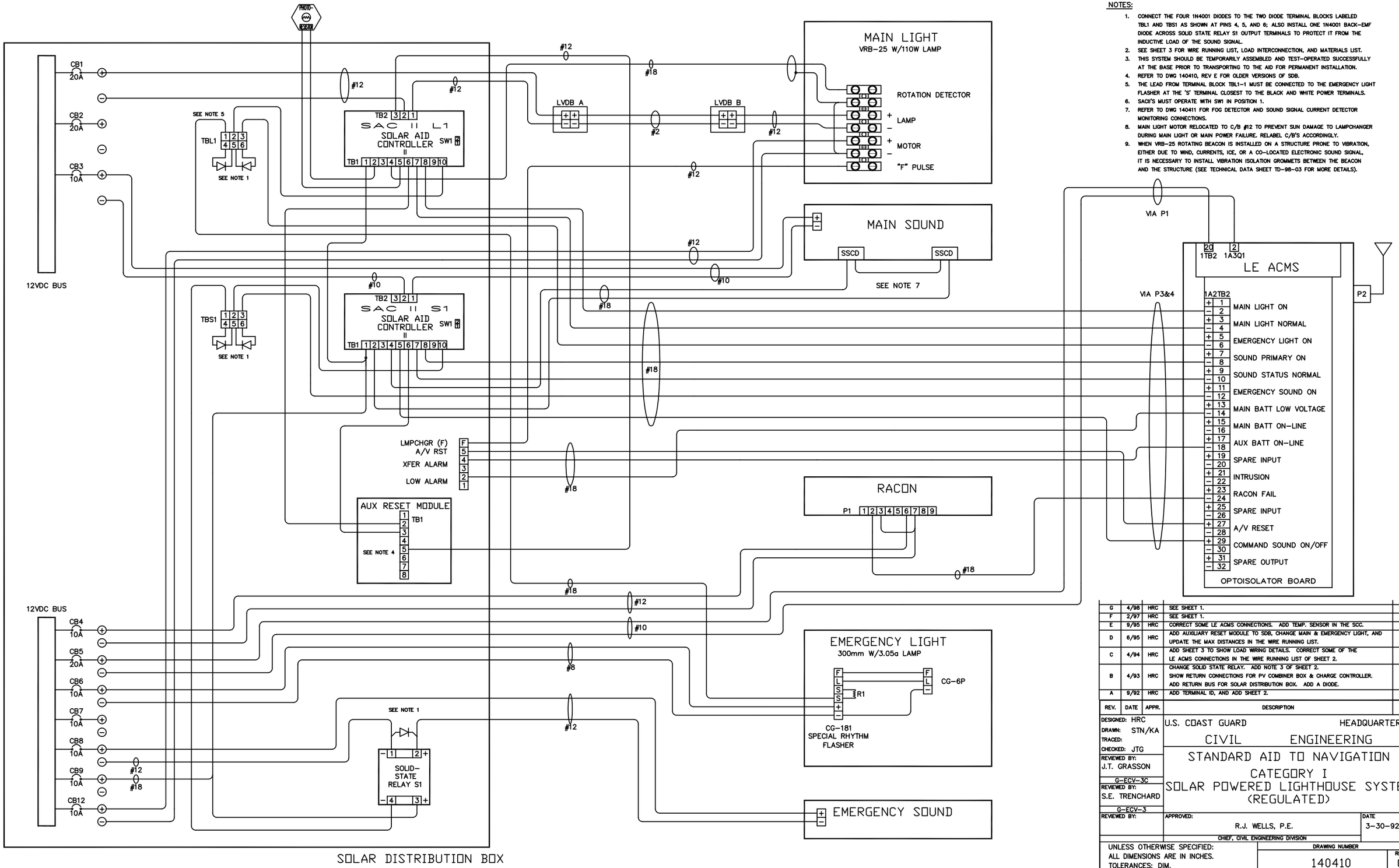

NOTES:

1. CONNECT THE FOUR 1N4001 DIODES TO THE TWO DIODE TERMINAL BLOCKS LABELED TBL1 AND TBS1 AS SHOWN AT PINS 4, 5, AND 6; ALSO INSTALL ONE 1N4001 BACK-EMF DIODE ACROSS SOLID STATE RELAY S1 OUTPUT TERMINALS TO PROTECT IT FROM THE INDUCTIVE LOAD OF THE SOUND SIGNAL.
2. SEE SHEET 3 FOR WIRE RUNNING LIST, LOAD INTERCONNECTION, AND MATERIALS LIST.
3. THIS SYSTEM SHOULD BE TEMPORARILY ASSEMBLED AND TEST-OPERATED SUCCESSFULLY AT THE BASE PRIOR TO TRANSPORTING TO THE AID FOR PERMANENT INSTALLATION.
4. REFER TO DWG 140410, REV E FOR OLDER VERSIONS OF SDB.
5. THE LEAD FROM TERMINAL BLOCK TBL1-1 MUST BE CONNECTED TO THE EMERGENCY LIGHT FLASHER AT THE 'S' TERMINAL CLOSEST TO THE BLACK AND WHITE POWER TERMINALS.
6. SACII'S MUST OPERATE WITH SW1 IN POSITION 1.
7. REFER TO DWG 140411 FOR FOG DETECTOR AND SOUND SIGNAL CURRENT DETECTOR MONITORING CONNECTIONS.
8. MAIN LIGHT MOTOR RELOCATED TO C/B #12 TO PREVENT SUN DAMAGE TO LAMPCHANGER DURING MAIN LIGHT OR MAIN POWER FAILURE. RELABEL C/B'S ACCORDINGLY.
9. WHEN VRB-25 ROTATING BEACON IS INSTALLED ON A STRUCTURE PRONE TO VIBRATION, EITHER DUE TO WIND, CURRENTS, ICE, OR A CO-LOCATED ELECTRONIC SOUND SIGNAL, IT IS NECESSARY TO INSTALL VIBRATION ISOLATION GROMMETS BETWEEN THE BEACON AND THE STRUCTURE (SEE TECHNICAL DATA SHEET TD-98-03 FOR MORE DETAILS).

REV.	DATE	APPR.	DESCRIPTION	BY
G	4/98	HRC	SEE SHEET 1.	STN
F	2/97	HRC	SEE SHEET 1.	STN
E	9/95	HRC	CORRECT SOME LE ACMS CONNECTIONS. ADD TEMP. SENSOR IN THE SCC.	STN
D	6/95	HRC	ADD AUXILIARY RESET MODULE TO SDB, CHANGE MAIN & EMERGENCY LIGHT, AND UPDATE THE MAX DISTANCES IN THE WIRE RUNNING LIST.	STN
C	4/94	HRC	ADD SHEET 3 TO SHOW LOAD WIRING DETAILS. CORRECT SOME OF THE LE ACMS CONNECTIONS IN THE WIRE RUNNING LIST OF SHEET 2.	STN
B	4/93	HRC	CHANGE SOLID STATE RELAY. ADD NOTE 3 OF SHEET 2. SHOW RETURN CONNECTIONS FOR PV COMBINER BOX & CHARGE CONTROLLER. ADD RETURN BUS FOR SOLAR DISTRIBUTION BOX. ADD A DIODE.	STN
A	9/92	HRC	ADD TERMINAL ID, AND ADD SHEET 2.	STN

DESIGNED: HRC
DRAWN: STN/KA
TRACED:
CHECKED: JTG
REVIEWED BY: J.T. GRASSON
G-ECV-3C
REVIEWED BY: S.E. TRENCHARD
G-ECV-3
REVIEWED BY:

U.S. COAST GUARD HEADQUARTERS
CIVIL ENGINEERING

STANDARD AID TO NAVIGATION
CATEGORY I
SOLAR POWERED LIGHTHOUSE SYSTEM
(REGULATED)

APPROVED: R.J. WELLS, P.E.
CHIEF, CIVIL ENGINEERING DIVISION
DATE 3-30-92

UNLESS OTHERWISE SPECIFIED:
ALL DIMENSIONS ARE IN INCHES.
TOLERANCES: DIM.
ANG.

DRAWING NUMBER 140410 REV. G
SCALE: NONE SHEET 2 OF 3

PLOTTING SCALE:

POINT TO POINT WIRE RUNNING LIST

FROM	WIRE SIZE (AWG)	MAX DISTANCE (FT)	TO
MAIN PV SUB-ARRAY, LTB, A(+)	8	6	PV COMBINER BOX, FB1-A
MAIN PV SUB-ARRAY, LTB, A(-)	8	6	PV COMBINER BOX, TB(-)
MAIN PV SUB-ARRAY, LTB, B(+)	8	6	PV COMBINER BOX, FB1-B
MAIN PV SUB-ARRAY, LTB, B(-)	8	6	PV COMBINER BOX, TB(-)
MAIN PV SUB-ARRAY, LTB, C(+)	8	6	PV COMBINER BOX, FB1-C
MAIN PV SUB-ARRAY, LTB, C(-)	8	6	PV COMBINER BOX, TB(-)
MAIN PV SUB-ARRAY, LTB, D(+)	8	6	PV COMBINER BOX, FB2-A
MAIN PV SUB-ARRAY, LTB, D(-)	8	6	PV COMBINER BOX, TB(-)
MAIN PV SUB-ARRAY, LTB, E(+)	8	6	PV COMBINER BOX, FB2-B
MAIN PV SUB-ARRAY, LTB, E(-)	8	6	PV COMBINER BOX, TB(-)
PV COMBINER BOX, TB(+) A	2	24	CHARGE CONTROLLER, CB1
PV COMBINER BOX, TB(-) A	2	24	CHARGE CONTROLLER, TB-1
PV COMBINER BOX, TB(+) B	2	24	CHARGE CONTROLLER, CB2
PV COMBINER BOX, TB(-) B	2	24	CHARGE CONTROLLER, TB-2
PV COMBINER BOX, TB(+) C	2	48	CHARGE CONTROLLER, CB3
PV COMBINER BOX, TB(-) C	2	48	CHARGE CONTROLLER, TB-3
PV COMBINER BOX, GROUND LUG	6	80	CHARGE CONTROLLER, GROUND LUG
CHARGE CONTROLLER, TB-4, BATTERY(+)	2	3.6	BATTERY BANK(+)
CHARGE CONTROLLER, TB-5, BATTERY(-)	2	3.6	BATTERY BANK(-)
CHARGE CONTROLLER, CB4, LOAD(+)	2	10	SDB, MAIN POWER IN TERM(+)
CHARGE CONTROLLER, TB-6, LOAD(-)	2	10	SDB, MAIN POWER IN TERM(-)
SDB, AUX BATTERY IN TERM(+)	6	12	AUX BATTERY(+)
SDB, AUX BATTERY IN TERM(-)	6	12	AUX BATTERY(-)
AUX PV ARRAY(+)	10	96	SDB, AUX ARRAY IN TERM(+)
AUX PV ARRAY(-)	10	96	SDB, AUX ARRAY IN TERM(-)
SDB, PIN 1(+)	12	2.5	LOW VOLTAGE DROP BOX, A(+)
SDB, PIN 1(-)	12	2	SAC II L1, TB2-2
SAC II L1, TB2-1	12	2.5	LOW VOLTAGE DROP BOX, A(-)
LOW VOLTAGE DROP BOX, A(+)	2	45	LOW VOLTAGE DROP BOX, B(+)
LOW VOLTAGE DROP BOX, A(-)	2	45	LOW VOLTAGE DROP BOX, B(-)
LOW VOLTAGE DROP BOX, B(+)	12	2.5	MAIN LIGHT, LAMP(+)
LOW VOLTAGE DROP BOX, B(-)	12	2.5	MAIN LIGHT, LAMP(-)
SAC II L1, TB2-3	12	150	SDB, AUXILIARY RESET MODULE, TB1-5
SDB, LMPCHGR (F)	12	150	MAIN LIGHT, "F" PULSE
SDB, PIN 12(+)	12	150	MAIN LIGHT, MOTOR(+)
SDB, PIN 12(-)	12	150	MAIN LIGHT, MOTOR(-)
MAIN LIGHT, ROTATION DETECTOR	12		MAIN LIGHT, MOTOR(-)
SAC II L1, TB1-4 SHIELDED	18	150	MAIN LIGHT, ROTATION DETECTOR
SAC II L1, TB1-5	18	150	PHOTORESISTOR, 1ST LEAD
SAC II L1, TB1-2	18	150	PHOTORESISTOR, 2ND LEAD
SDB, PIN 3(+)	10	40	MAIN SOUND SIGNAL(+)
SDB, PIN 3(-)	10	6	SAC II S1, TB2-2
MAIN SOUND SIGNAL(-)	10	40	SAC II S1, TB2-1
SDB, PIN 4(+)	12	160	RACON, P1-6(+)
SDB, PIN 4(-)	12	160	RACON, P1-7(-)
RACON, P1-3	18		RACON, P1-7(-)
SDB, PIN 5(+)	10	80	LE ACMS, 1TB2-20, VIA P1
SDB, PIN 5(-)	10	80	LE ACMS, 1A3Q1-2, VIA P1
SAC II L1, TB1-10	18	6	DIODE TERMINAL BLOCK, TBL1-2
DIODE TERMINAL BLOCK, TBL1-1	18	100	EMERGENCY LIGHT, FLASHER(S)
SDB, PIN 6(+)	8	73	EMERGENCY LIGHT, FLASHER(+)
SDB, PIN 6(-)	8	73	EMERGENCY LIGHT, FLASHER(-)
SDB, PIN 8(+)	12	30	EMERGENCY SOUND SIGNAL(+)
SDB, PIN 8(-)	12	2	SOLID STATE RELAY S1, PIN 1
EMERGENCY SOUND SIGNAL(-)	12	30	SOLID STATE RELAY S1, PIN 2
SDB, PIN 9(+)	18		SAC II S1, TB1-1
SAC II S1, TB1-1	18		SAC II L1, TB1-1
SAC II S1, TB1-1	18		SOLID STATE RELAY S1, PIN 3
SAC II S1, TB1-2	18		SAC II S1, TB1-3
SAC II S1, TB1-10	18		SDB, DIODE TERMINAL BLOCK, TBS1-2
SDB, DIODE TERMINAL BLOCK, TBS1-1	18		SOLID STATE RELAY S1, PIN 4
SAC II L1, TB1-6	18		SDB, AUXILIARY RESET MODULE, TB1-2
SAC II S1, TB1-6	18		SDB, AUXILIARY RESET MODULE, TB1-3
SAC II L1, TB1-8	18		OPTO BRD 1A2TB2-2 VIA P4
SAC II L1, TB1-7	18		OPTO BRD 1A2TB2-4 VIA P4
SDB, DIODE TERMINAL BLOCK, TBL1-3	18		OPTO BRD 1A2TB2-6 VIA P4
SAC II S1, TB1-8	18		OPTO BRD 1A2TB2-8 VIA P4
SAC II S1, TB1-7	18		OPTO BRD 1A2TB2-10 VIA P4
SDB, DIODE TERMINAL BLOCK, TBS1-3	18		OPTO BRD 1A2TB2-12 VIA P4
SDB, LOW ALARM 2	18		OPTO BRD 1A2TB2-14 VIA P4
RACON, P1-2	18		OPTO BRD 1A2TB2-24 VIA P3
SDB, A/V RST (5)	18		OPTO BRD 1A2TB2-27 VIA P4
SAC II S1, TB1-5	18		OPTO BRD 1A2TB2-29 VIA P4

MAXIMUM DISTANCES SHOWN ABOVE ARE BASED ON THE CONFIGURATION SHOWN ON SHEET 1.
CONSULT WITH THE WIRING SIZING CHAPTER OF COMDTINST M16500.24 WHEN CONFIGURATION IS DIFFERENT.

BILL OF MATERIALS

ITEM	TYPE	SOURCE OF SUPPLY	QUANTITY
SOLAR DISTRIBUTION BOX	SDB	G-SEC	1
SOLAR AID CONTROLLER II	SAC II	G-SEC	2
SOLAR PANEL (35-WATT)	G-SEC QPL 401A	E/G-ICP	SEE NOTE 1
MAIN BATTERY, LEAD ACID, SIX 2-VOLT CELLS	FHGS-SERIES	EXIDE	SEE NOTE 1
AUX BATTERY, NI-CAD, 400 AH, TEN 1.2-VOLT CELLS	ED-400	SAFT NIFE, INC.	1
SOUND SIGNAL	FA-232/02	AUTOMATIC POWER, INC.	2
ROTATING BEACON, 12 VOLT	VRB-25	VEGA INDUSTRIES LIMITED	1
EMERGENCY LAMPS	12VDC, 3.05A	E/G-ICP	6
MAIN LAMPS	12VDC, 110 WATT	E/G-ICP	6, SEE NOTE 6
LAMPCHANGER, 12 VOLT	CG-6P	E/G-ICP	1
SPECIAL RHYTHM FLASHER	CG-181	C-R CONTROL SYSTEMS, INC.	1, SEE NOTE 4
PHOTORESISTOR	L	E/G-ICP	1
HI CURRENT LAMPCHANGER	CG-6P HI-WATTAGE	C-R CONTROL SYSTEM, INC.	1
SOLID-STATE RELAY 12 AMP, NORMALLY OPEN	MODEL D1D12	CRYDOM OR EQUIVALENT	1
RESISTOR R1	6800 OHM, 1/2 WATT 5% TOLERANCE	COMMERCIAL	1
LE ACMS ASSEMBLY	GCF-W-1221-LEACMS	G-SEC	1
AUX SOLAR PANEL (35-WATT)	SX-38MM OR M-75	SOLAREX, SIEMENS	1
RACON	TIDELAND SIGNAL CORP.	G-OPN	1
LOW VOLTAGE DROP PACKAGE	N/A	G-SEC	SEE NOTE 5
PV COMBINER BOX	N/A	G-SEC	1
CHARGE CONTROLLER	N/A	G-SEC	1
LOCAL TERMINAL BOX	N/A	G-SEC	4
EMERGENCY LIGHT	300 MM	TIDELAND SIGNAL COR.	1
DIODE	1N4001	COMMERCIAL	5
SOUND SIGNAL CURRENT DETECTOR	SSCD	G-SEC	2

NOTES:

1. THE MAIN PV ARRAY CONSISTS OF 35-WATT PANELS, DIVIDED INTO UP TO 5 GROUPS. EACH GROUP CONSISTS OF UP TO 8 PANELS CONNECTED AS SHOWN IN SHEET 1, AND TERMINATED AT A LOCAL TERMINAL BOX. THE AUXILIARY PV ARRAY CONSISTS OF ONE SX-38MM PANEL CONNECTED TO THE SDB. THE NUMBER OF PANELS AND TILT ANGLE SHALL BE DETERMINED BY THE SOLARCALC COMPUTER PROGRAM.
2. SYSTEM DESIGNED ON THE PREMISE THAT SOLAR PANELS AND BATTERIES WILL BE LOCATED NEAR EACH OTHER WITH SIGNAL LOADS FARTHER UP THE LIGHTHOUSE STRUCTURE. SAC II'S SHOULD BE MOUNTED IN OR ADJACENT TO THE SDB ENCLOSURE. ASSURE A GOOD THERMAL CONTACT BETWEEN THE SAC AND THE PANEL IT IS ATTACHED TO.
3. WIRE SIZES ARE BASED ON MAXIMUM ANTICIPATED LOADS. WIRES MAY BE RESIZED ONLY IF LOAD AND CHARGING CIRCUIT VOLTAGE DROPS DO NOT EXCEED 0.35 VOLT AND 0.75 VOLT, RESPECTIVELY.
4. ONLY C-R CONTROL SYSTEMS, INC., FLASHER WILL PERFORM EMERGENCY LIGHT CIRCUIT FUNCTION.
5. THE LOW VOLTAGE DROP PACKAGE CONSISTS OF TWO TERMINAL BOXES AND TWO #12/2 AWG CABLES (6 FT. EA.).
6. THIS SYSTEM IS DESIGNED AROUND 110 WATT LAMP; SMALLER LAMPS MAY ALSO BE USED WHERE REDUCED OPERATIONAL PERFORMANCE IS SUFFICIENT.
7. REFER TO DWG 140410, REV E FOR OLDER VERSIONS OF SDB.
8. REFER TO DWG 140411 FOR FOG DETECTOR CONNECTIONS.
9. MAIN LIGHT MOTOR RELOCATED TO C/B #12 TO PREVENT SUN DAMAGE TO LAMPCHANGER DURING MAIN LIGHT OR MAIN POWER FAILURE. RELABEL C/B'S ACCORDINGLY.
10. WHEN VRB-25 ROTATING BEACON IS INSTALLED ON A STRUCTURE PRONE TO VIBRATION, EITHER DUE TO WIND, CURRENTS, ICE, OR A CO-LOCATED ELECTRONIC SOUND SIGNAL, IT IS NECESSARY TO INSTALL VIBRATION ISOLATION GROMMETS BETWEEN THE BEACON AND THE STRUCTURE (SEE TECHNICAL DATA SHEET TD-98-03 FOR MORE DETAILS).

REV.	DATE	APPR.	DESCRIPTION	BY
G	4/98	HRC	RELOCATE MAIN LIGHT MOTOR TO C/B #12, UPDATE THE MAX DISTANCES IN THE WIRE RUNNING LIST, AND ADD A NOTE ON VRB-25 ISOLATION.	STN
F	2/97	HRC	CORRECT SOME LE ACMS CONNECTIONS. ADD A JUMPER ON RACON. INCLUDE SOME CHANGES TO BETTER REPRESENT SDB. ADD SOUND SIGNAL CURRENT DETECTORS.	STN
E	9/95	HRC	CORRECT SOME LE ACMS CONNECTIONS. ADD TEMP. SENSOR IN THE SCC.	STN
D	6/95	HRC	ADD AUXILIARY RESET MODULE TO SDB, CHANGE MAIN & EMERGENCY LIGHT, AND UPDATE THE MAX DISTANCES IN THE WIRE RUNNING LIST.	STN
C	4/94	HRC	ADD SHEET 3 TO SHOW LOAD WIRING DETAILS. CORRECT SOME OF THE LOW POWER ACMS CONNECTIONS IN THE WIRE RUNNING LIST OF SHEET 2.	STN
B	4/93	HRC	CHANGE SOLID STATE RELAY. ADD NOTE 3 OF SHEET 2. SHOW RETURN CONNECTIONS FOR PV COMBINER BOX & CHARGE CONTROLLER. ADD RETURN BUS FOR SOLAR DISTRIBUTION BOX. ADD A DIODE.	STN
A	9/92	HRC	ADD TERMINAL ID, AND ADD SHEET 2.	STN

DESIGNED: HRC
DRAWN: STN/KA
TRACED:
CHECKED: JTG
REVIEWED BY: J.T. GRASSON
G-ECV-3C
REVIEWED BY: S.E. TRENCHARD
G-ECV-3
REVIEWED BY:

U.S. COAST GUARD HEADQUARTERS
CIVIL ENGINEERING

STANDARD AID TO NAVIGATION
CATEGORY I
SOLAR POWERED LIGHTHOUSE SYSTEM
(REGULATED)

APPROVED: R.J. WELLS, P.E.
CHIEF, CIVIL ENGINEERING DIVISION
DATE 3-30-92

UNLESS OTHERWISE SPECIFIED:
ALL DIMENSIONS ARE IN INCHES.
TOLERANCES: DIM.
ANG.

DRAWING NUMBER 140410 REV. G
SCALE: NONE SHEET 3 OF 3

PLOTTING SCALE: