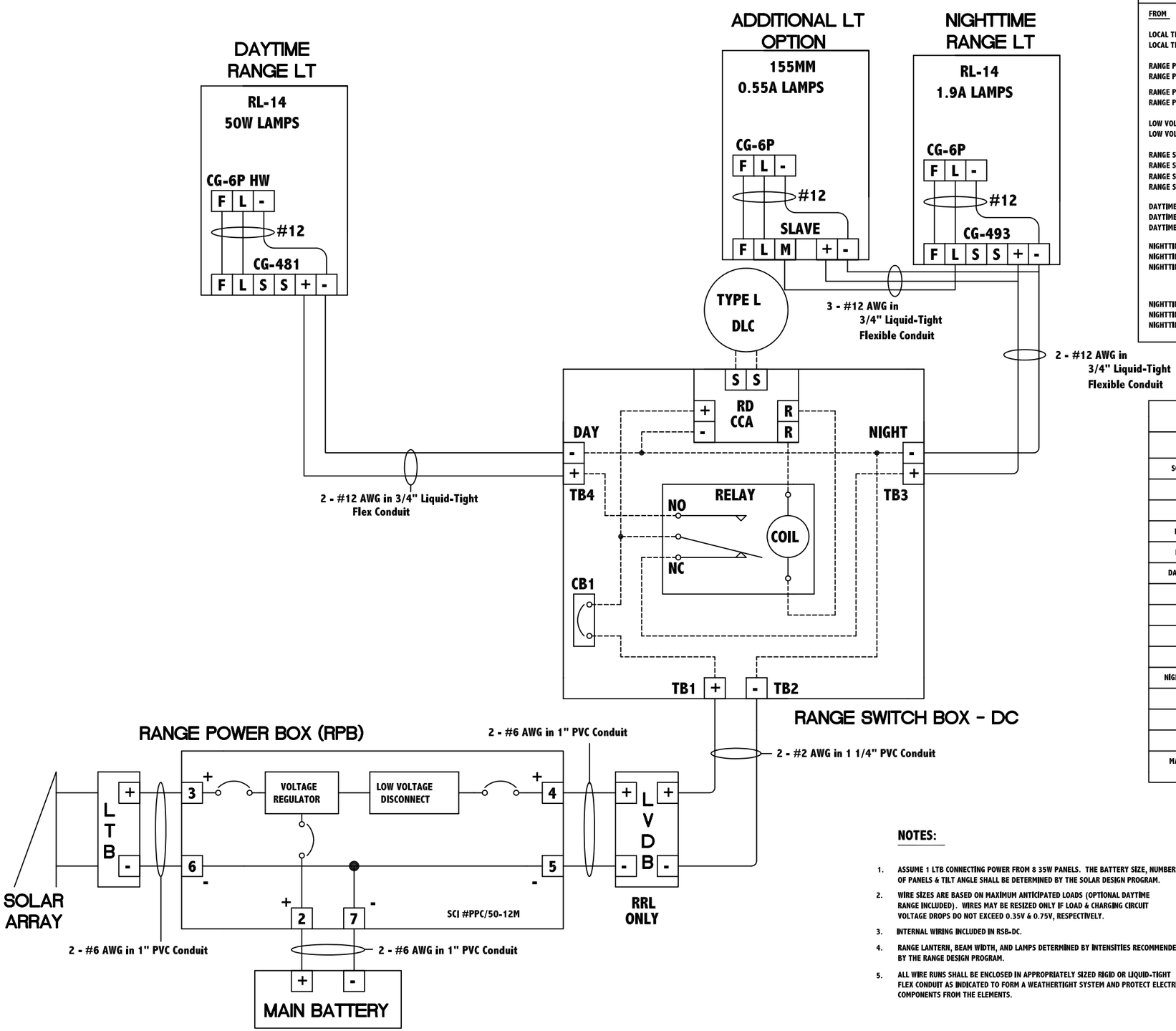

POINT TO POINT WIRE RUNNING LIST

FROM	WIRE SIZE (AWG)	MAX DISTANCE (FT)	TO
LOCAL TERMINAL BOX (+)	6	23	RANGE POWER BOX, 3(+)
LOCAL TERMINAL BOX (-)	6	23	RANGE POWER BOX, 6(-)
RANGE POWER BOX, 4(+)	6*	2.5	LOW VOLTAGE DROP BOX (+)
RANGE POWER BOX, 5(-)	6*	2.5	LOW VOLTAGE DROP BOX (-)
RANGE POWER BOX, 2(+)	6	15	MAIN BATTERY (+)
RANGE POWER BOX, 7(-)	6	15	MAIN BATTERY (-)
LOW VOLTAGE DROP BOX (+)	2	100	RANGE SWITCH BOX-DC, TB1
LOW VOLTAGE DROP BOX (-)	2	100	RANGE SWITCH BOX-DC, TB2
RANGE SWITCH BOX-DC, TB4(+)	12	5	DAYTIME RANGE LT, CG-481 (+)
RANGE SWITCH BOX-DC, TB4(-)	12	5	DAYTIME RANGE LT, CG-481 (-)
RANGE SWITCH BOX-DC, TB3(+)	12	5	NIGHTTIME RANGE LT, CG-493 (+)
RANGE SWITCH BOX-DC, TB3(-)	12	5	NIGHTTIME RANGE LT, CG-493 (-)
DAYTIME RANGE LT, CG-481 (F)	12		DAYTIME RANGE LT, CG-6P HW (F)
DAYTIME RANGE LT, CG-481 (L)	12		DAYTIME RANGE LT, CG-6P HW (L)
DAYTIME RANGE LT, CG-481 (-)	12		DAYTIME RANGE LT, CG-6P HW (-)
NIGHTTIME RANGE LT, CG-493 (F)	12		NIGHTTIME RANGE LT, CG-6P (F)
NIGHTTIME RANGE LT, CG-493 (L)	12		NIGHTTIME RANGE LT, CG-6P (L)
NIGHTTIME RANGE LT, CG-493 (-)	12		NIGHTTIME RANGE LT, CG-6P (-)
	ADDITIONAL LIGHT OPTION		
NIGHTTIME RANGE LT, CG-493 (L)	12		ADDITIONAL LT, SLAVE (M)
NIGHTTIME RANGE LT, CG-493 (+)	12		ADDITIONAL LT, SLAVE (+)
NIGHTTIME RANGE LT, CG-493 (-)	12		ADDITIONAL LT, SLAVE (-)

BILL OF MATERIALS

ITEM	TYPE	SOURCE OF SUPPLY	QUANTITY
SOLAR PANEL (35-WATT)	G-SEC QPL 401A	ELC	SEE NOTE 1
LOCAL TERMINAL BOX	LTB	G-SEC	1
RANGE POWER BOX	SCI #PPC/50-12M	G-SEC	1
LOW VOLTAGE DROP KIT	LVDK	G-SEC	1
RANGE SWITCH BOX-DC	RSB-DC	G-SEC	1
DAYTIME RANGE LT, RL-14	CARLISLE & FINCH	ELC	SEE NOTE 5
HW FLASHER	CG-481	ELC	1
HW SLAVE FLASHER	CG-481 SLAVE	ACSI	1(IF REQUIRED)
HW LAMP CHANGER	CG-6P HW	ELC	1(2 IF REQUIRED)
LAMPS	12VDC, 50W	ELC	6(12 IF REQUIRED)
NIGHTTIME RANGE LT, RL-14	CARLISLE & FINCH	ELC	1
12VDC FLASHER	CG-493 / CG-181	ELC	1
12VDC LAMPCHANGER	CG-6P	ELC	1
LAMPS	12VDC, 1.9A	ELC	6
MAIN BATTERY, LEAD ACID SIX 2-VOLT CELLS	FULMEN	EXIDE	1

NOTES:

1. ASSUME 1 LTB CONNECTING POWER FROM 8 35W PANELS. THE BATTERY SIZE, NUMBER OF PANELS & TILT ANGLE SHALL BE DETERMINED BY THE SOLAR DESIGN PROGRAM.
2. WIRE SIZES ARE BASED ON MAXIMUM ANTICIPATED LOADS (OPTIONAL DAYTIME RANGE INCLUDED). WIRES MAY BE RESIZED ONLY IF LOAD & CHARGING CIRCUIT VOLTAGE DROPS DO NOT EXCEED 0.35V & 0.75V, RESPECTIVELY.
3. INTERNAL WIRING INCLUDED IN RSB-DC.
4. RANGE LANTERN, BEAM WIDTH, AND LAMPS DETERMINED BY INTENSITIES RECOMMENDED BY THE RANGE DESIGN PROGRAM.
5. ALL WIRE RUNS SHALL BE ENCLOSED IN APPROPRIATELY SIZED RIGID OR LIQUID-TIGHT FLEX CONDUIT AS INDICATED TO FORM A WEATHERTIGHT SYSTEM AND PROTECT ELECTRICAL COMPONENTS FROM THE ELEMENTS.

REV.	DATE	APPR.	DESCRIPTION	BY
B	9/04		ADDED ADDITIONAL LIGHT OPTION	
A	8/03	JTG	ADDED CONDUIT, JUNCTION BOX, CHANGE CG-181 TO CG-493, NOTES 6 ND 7	KMD

DESIGNED: STN
DRAWN: STN
TRACED:
CHECKED: KA/JTG
REVIEWED BY: H.R. CLEVELAND G-SEC-2A
REVIEWED BY: L.E. JAEGER G-SEC-2
REVIEWED BY:

U.S. COAST GUARD HEADQUARTERS
CIVIL ENGINEERING

STANDARD AID TO NAVIGATION
SOLAR DAY/NIGHT RANGE
(RANGE CATEGORY S-D/N)
SMALL POWER SYSTEM

APPROVED: CAPT J.A. RAUCH, CHIEF, OFFICE OF CIVIL ENGINEERING
DATE: 5/8/97

UNLESS OTHERWISE SPECIFIED:
ALL DIMENSIONS ARE IN INCHES.
TOLERANCES: DIM.
ANG.

DRAWING NUMBER: 140503
REV. B
SCALE: NONE
SHEET 1 OF 1

PLOTTING SCALE: