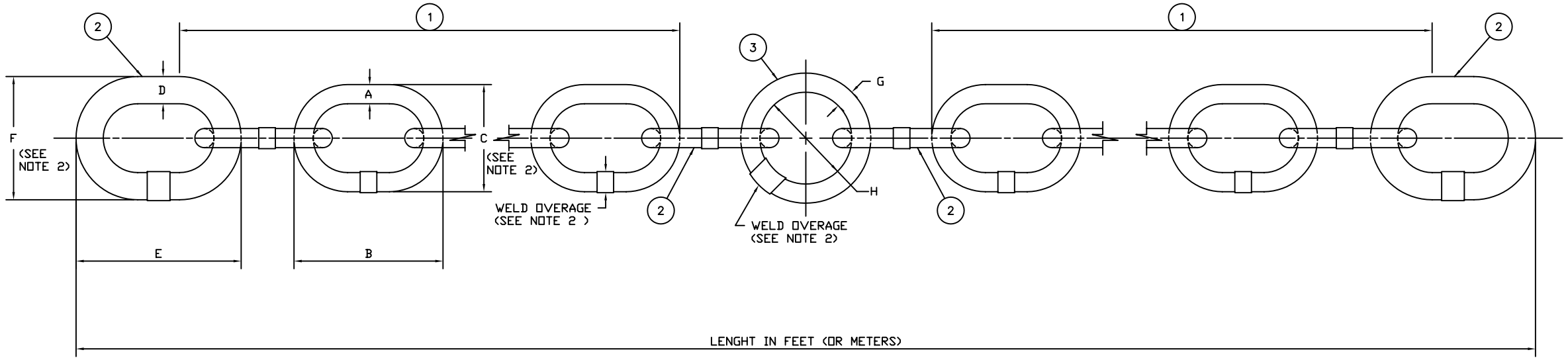

BILL OF MATERIALS

ITEM NO.	NO. REQ.	DESCRIPTION	MATL.	REMARKS
1	AR	COMMON LINK	STEEL	
2	4	END LINK	STEEL	
3	1	CENTER RING	STEEL	

NOTES

1. SEE LATEST REVISION OF U.S.C.G CIVIL ENGINEERING SPECIFICATION No. 377 FOR FABRICATION REQUIREMENTS.
2. WELD OVERAGE SHALL NOT BE INCLUDED IN THE MEASUREMENT OF DIMENSIONS "C" AND "F" (OVERALL WIDTH) OR DIMENSION "H" (INSIDE DIAMETER OF CENTER RING).

PROOF AND BREAKING LOADS

BRIDLE LINK DIAMETER		PROOF LOAD		BREAKING LOAD	
IN	MM	LB	KG	LB	KG
7/8	22	22,000	9,979	44,000	19,958
1	25	29,000	13,154	58,000	26,308
1-1/4	32	45,500	20,638	91,000	41,277
1-1/2	38	65,500	29,710	131,000	59,421

U.S. CUSTOMARY
(INCHES)

	1				2				3			LENGTH IN FEET		APPROX. WEIGHT
TYPE (INCHES×FEET)	A	B	C	TOLERANCE (B & C)	D	E	F	TOLERANCE (E & F)	G	H	TOLERANCE (H)	MINIMUM	MAXIMUM	IN (LBS.)
7/8x10	7/8	5 1/4	3 1/8	±1/16	1 1/8	6 3/4	4	±3/32	1 1/4	6	±1/8	10'-0"	10'-7"	80
1x12	1	6	3 9/16	±3/32	1 1/4	7 1/2	4 7/16	±1/8	1 1/2	6	±5/32	11'-3"	12'-3"	120
1 1/4x15	1 1/4	7 1/2	4 7/16	±1/8	1 1/2	9	5 5/16	±5/32	1 3/4	6	±3/16	14'-0"	15'-3"	215
1 1/2x18	1 1/2	9	5 5/16	±5/32	1 7/8	11 1/4	6 11/16	±3/16	2 1/4	8	±1/4	17'-0"	18'-3"	400
1 1/2x20	1 1/2	9	5 5/16	±5/32	1 7/8	11 1/4	6 11/16	±3/16	2 1/4	8	±1/4	19'-0"	20'-3"	430
1 1/2x26	1 1/2	9	5 5/16	±5/32	1 7/8	11 1/4	6 11/16	±3/16	2 1/4	8	±1/4	25'-0"	26'-3"	555

DIA. TOLERANCE

U.S. CUSTOMARY (INCHES)		
DIA. A D & G	PLUS	MINUS
1/2-1 1/2	1/32	1/64
1 5/8-2 1/4	1/16	1/64
METRIC (mm)		
DIA. A D & G	PLUS	MINUS
12.7-38	1	.5
42-56	1.5	.5

METRIC
(MILLIMETERS)

	1				2				3			LENGTH IN METERS		APPROX. WEIGHT
TYPE (MMxM)	A	B	C	TOLERANCE (B & C)	D	E	F	TOLERANCE (E & F)	G	H	TOLERANCE (H)	MINIMUM	MAXIMUM	IN (KGS.)
22x3.1	22	132	79.5	±1.5	28	168	100.5	±2.5	32	150	±3.5	3.00	3.20	36.3
25x3.6	25	150	87.5	±2.5	32	192	114	±3.5	38	150	±4.0	3.38	3.65	54.5
32x4.5	32	192	114	±3.5	38	228	134.5	±4.0	44	150	±5.0	4.24	4.57	97.5
38x5.5	38	228	134.5	±4.0	48	288	171	±5.0	56	203	±6.5	5.12	5.50	181.5
38x6.1	38	228	134.5	±4.0	48	288	171	±5.0	56	203	±6.5	5.70	6.12	195
38x7.9	38	228	134.5	±4.0	48	288	171	±5.0	56	203	±6.5	7.46	8.00	252.0

REV.	DATE	APPR.	DESCRIPTION	BY
F	11-7-05	WD	ADDED PROOF AND BREAKING LOAD CHART. ADDED MIN AND MAX DIMENSIONS FOR OVERALL LENGTH	S.M.
E	2-5-98	S.W.	CORRECTED THE LENGTH DIM FOR THE 38x6.1 BRIDDLE	S.M.
D	12-5-93	WD	ADDED 1 1/2x20 (38x6.1) BRIDDLE. MODIFIED NOTE 1.	S.M.
C	3-13-91	SW	REDRAWN USING AUTOCAD	DAG
B	8-1-86	SW	ADDED NOTES 2. DELETED REFERENCES TO OCEAN ENGINEERING DIVISION.	W.D.
A	3-3-86	SW	CHANGED DIMS "C" AND "F" FOR ALL ITEMS ON BOTH TABLES	W.D.

DESIGNED: SDR
DRAWN: GWB
TRACED: DAG
CHECKED: SDR
REVIEWED BY: S. D. Walker G-ECV-3B
REVIEWED BY: P. J. Glahe G-ECV-3
REVIEWED BY:

U.S. COAST GUARD HEADQUARTERS
CIVIL ENGINEERING

BUOY BRIDLES

APPROVED: L. R. Lomer
CHIEF OF OCEAN ENGINEERING BRANCH
DATE 2-16-83

UNLESS OTHERWISE SPECIFIED:
ALL DIMENSIONS ARE IN INCHES.
TOLERANCES: DIM.
ANG.

DRAWING NUMBER 121031 REV. F
SCALE: NONE SHEET 1 OF 1

PLOTTING SCALE: 12"=1'-0"