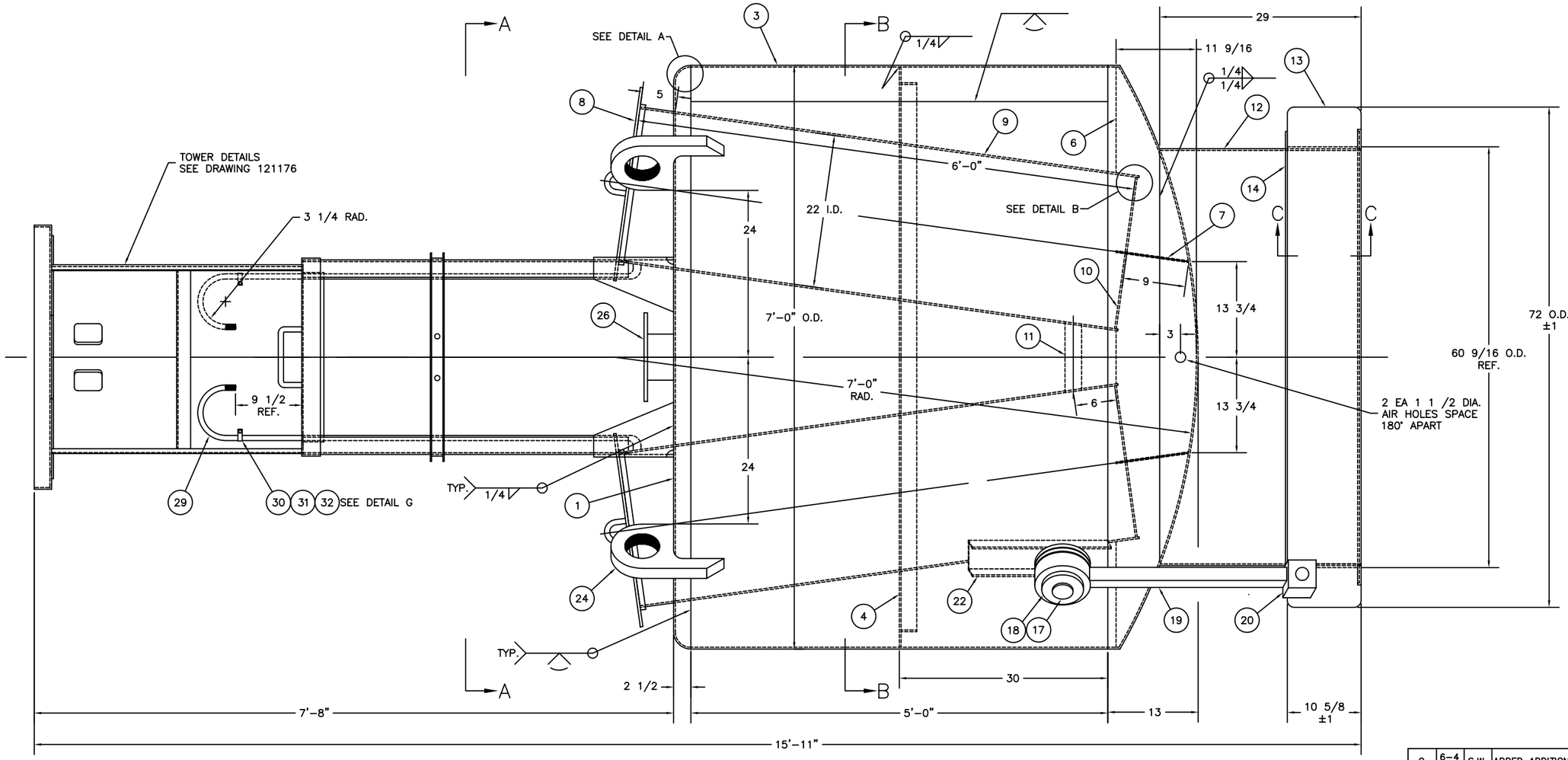

7x17 LR BUOY

SCALE: 1 1/2"=1'-0"

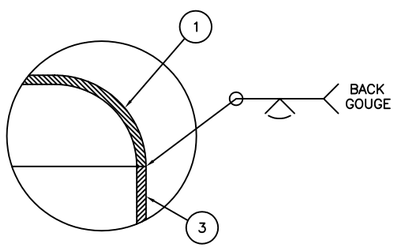

DETAIL A

SCALE: HALF

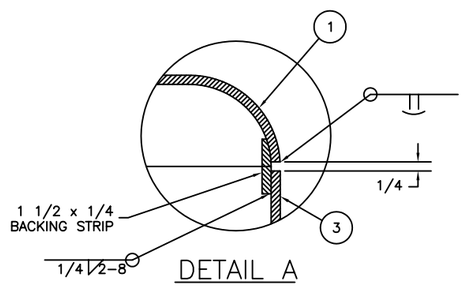

DETAIL A

SCALE: HALF
(OPTIONAL)

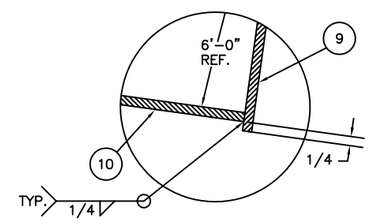

DETAIL B

SCALE: HALF

REV.	DATE	APPR.	DESCRIPTION	BY
G	6-4-99	S.W.	ADDED ADDITIONAL AIR TEST FITTING (ITEMS 27 & 28).	S.M.
F	10-1-97	S.W.	REORG DWG. DEL TOWER DETAILS. REF DWG 121176 FOR TWR. DEL 2 EA ITEM 30, 31, & 32. SHORTEN ITEM 29.	S.M.
E	12-15-94	SW	ADDED ITEM 65 & QTY REQ FOR ITEM 57. MOD. ITEM 36.	S.M.
D	10-26-94	SW	DEL ITEM 49. MOD ITEM 58. ADDED QTY FOR ITEM 50.	S.M.
C	1-4-93	CAK	REPLACED 7x17 TOWER WITH THE 6x20 TOWER. LOWERED BELL STAND. REORGANIZED DRAWING.	S.M.
B	6-6-91	SW	DELETED DETAILS 19-B, 20-A, 20-C, 20-E, 22-C, 24-B, AND 24-E.	S.M.
A	11-2-90	CAK	ROTATED BELL STAND 30°.	S.M.

DESIGNED:
DRAWN: R.V.F.
TRACED: S.M.
CHECKED: W.E.K.
REVIEWED BY: C. A. Kohler
PROJECT ENGINEER
REVIEWED BY: S. D. Walker
G-EOV-3B
REVIEWED BY:

U.S. COAST GUARD HEADQUARTERS
CIVIL ENGINEERING

1988 TYPE
7x17 LR BUOY

APPROVED: R. J. Wells
CHIEF, OCEAN ENGINEERING BRANCH
DATE 10/5/89

UNLESS OTHERWISE SPECIFIED:
ALL DIMENSIONS ARE IN INCHES.
TOLERANCES: DIM. ±1/8
ANG. ±30'

DRAWING NUMBER 121129 REV. G
SCALE: AS NOTED SHEET 1 OF 4

PLOTTING SCALE: 1 1/2"=1'-0"

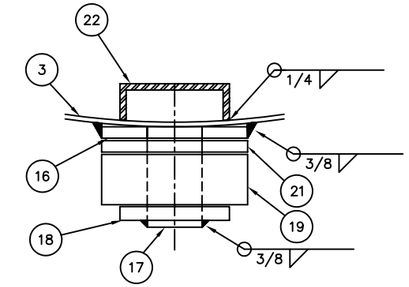

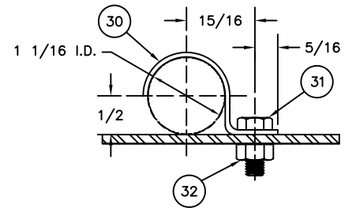

DETAIL G
SCALE: FULL

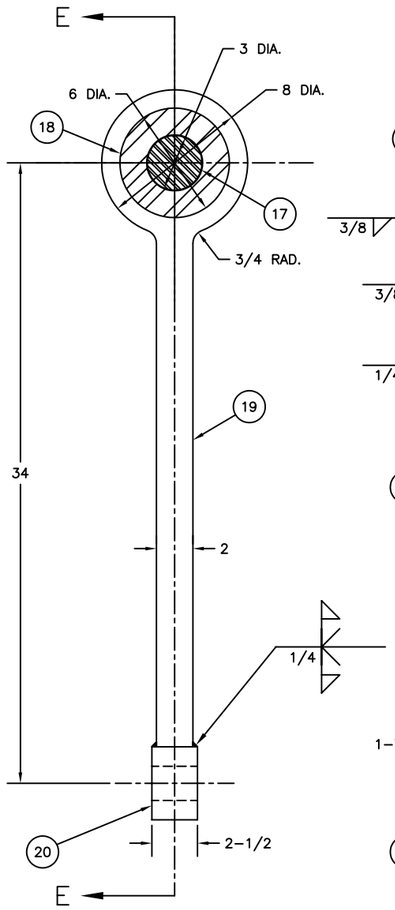

DETAIL E
SCALE: 3"=1'-0"

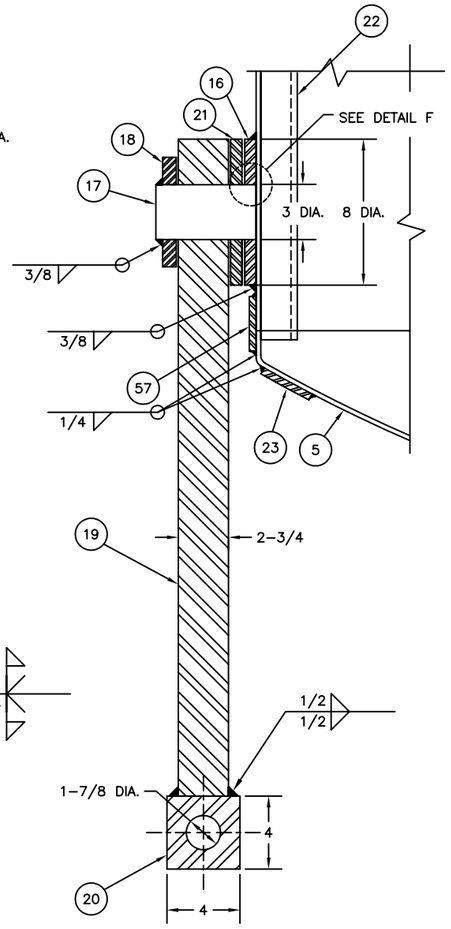

SECTION E-E
SCALE: 3"=1'-0"

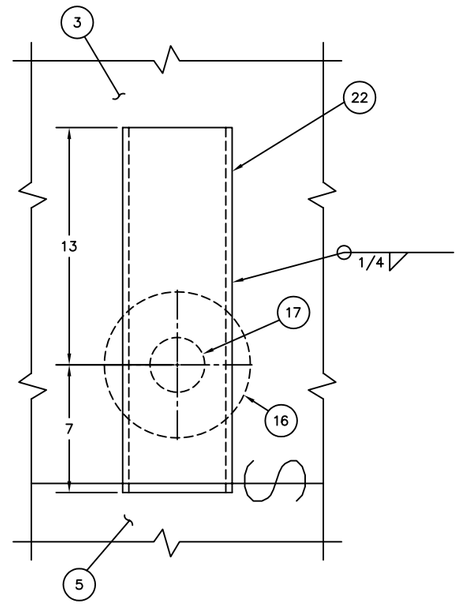

SECTION D-D
SCALE: 3"=1'-0"

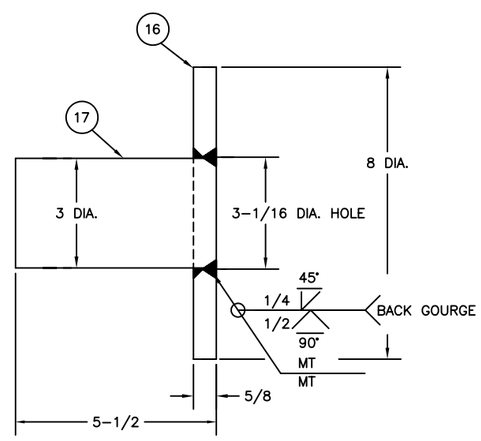

DETAIL F
SCALE: HALF

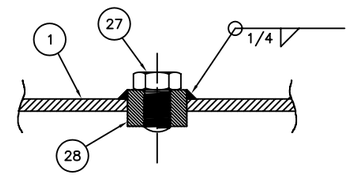

DETAIL H
SCALE: HALF

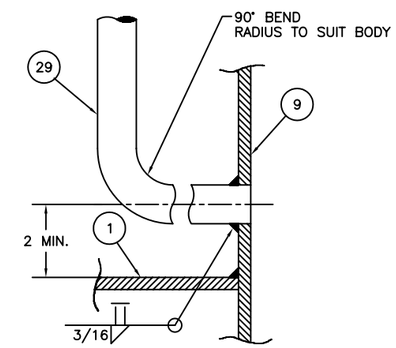

DETAIL J
SCALE: HALF

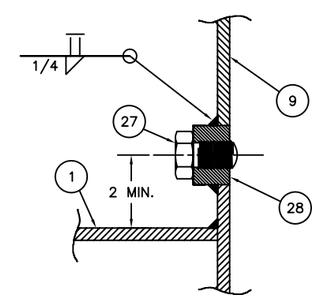

DETAIL K
SCALE: HALF

REV.	DATE	APPR.	DESCRIPTION	BY
G	6-4-99	S.W.	ADDED ADDITIONAL AIR TEST FITTING (ITEMS 27 & 28).	S.M.
F	10-1-97	S.W.	REORG DWG. DEL TOWER DETAILS. REF DWG 121176 FOR TWR. DEL 2 EA ITEM 30, 31, & 32. SHORTEN ITEM 29.	S.M.
E	12-15-94	SW	ADDED ITEM 65 & QTY REQ FOR ITEM 57. MOD. ITEM 36.	S.M.
D	10-26-94	SW	DEL ITEM 49. MOD ITEM 58. ADDED QTY FOR ITEM 50.	S.M.
C	1-4-93	CAK	REPLACED 7x17 TOWER WITH THE 6x20 TOWER. LOWERED BELL STAND. REORGANIZED DRAWING.	S.M.
B	6-6-91	SW	DELETED DETAILS 19-B, 20-A, 20-C, 20-E, 22-C, 24-B, AND 24-E.	S.M.
A	11-2-90	CAK	ROTATED BELL STAND 30°.	S.M.

DESIGNED:
DRAWN: R.V.F.
TRACED: S.M.
CHECKED: W.E.K.
REVIEWED BY: C. A. Kohler
PROJECT ENGINEER
REVIEWED BY: S. D. Walker
G-ECV-3B
REVIEWED BY:

U.S. COAST GUARD HEADQUARTERS
CIVIL ENGINEERING

1988 TYPE 7x17 LR BUOY

APPROVED: R. J. Wells
CHIEF, OCEAN ENGINEERING BRANCH
DATE 10/5/89

UNLESS OTHERWISE SPECIFIED:
ALL DIMENSIONS ARE IN INCHES.
TOLERANCES: DIM. ±1/8
ANG. ±30'

DRAWING NUMBER 121129 REV. G
SCALE: AS NOTED SHEET 3 OF 4

PLOTTING SCALE: 3"=1'-0"

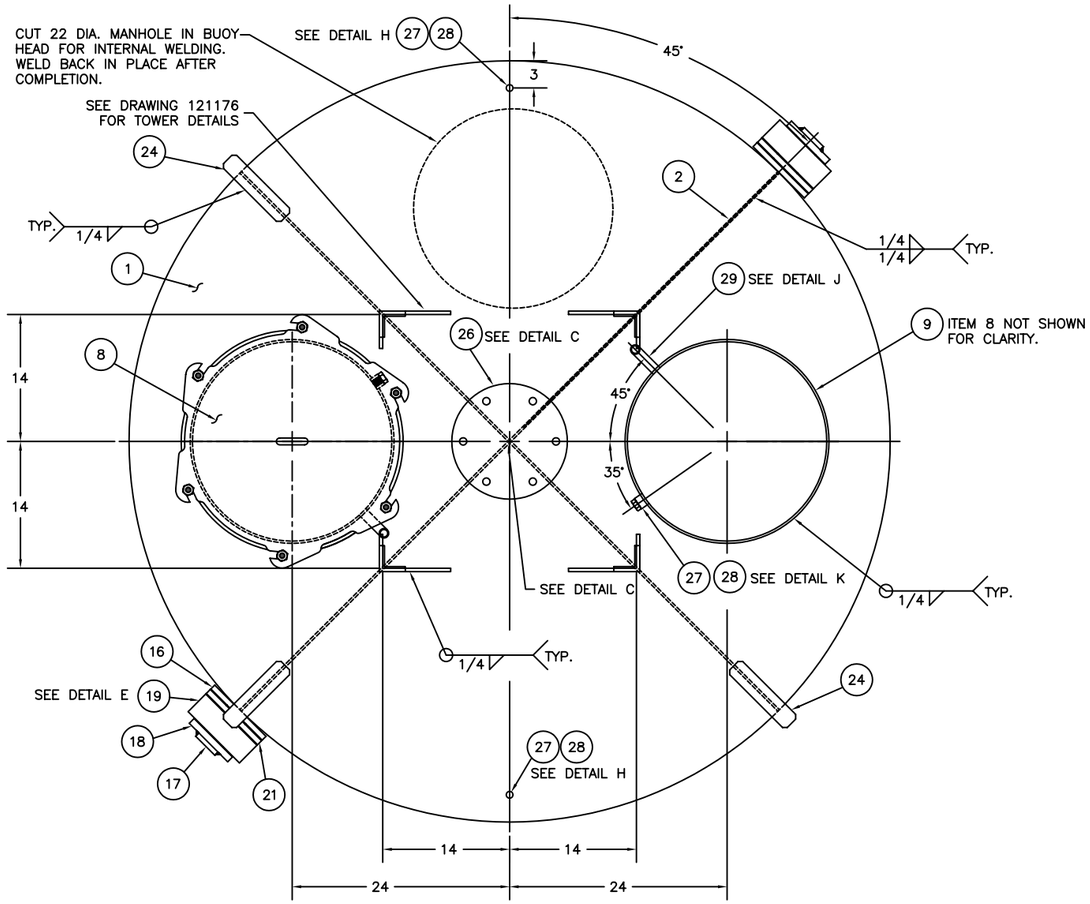

SECTION A–A

SCALE: 1 1/2"=1'–0"

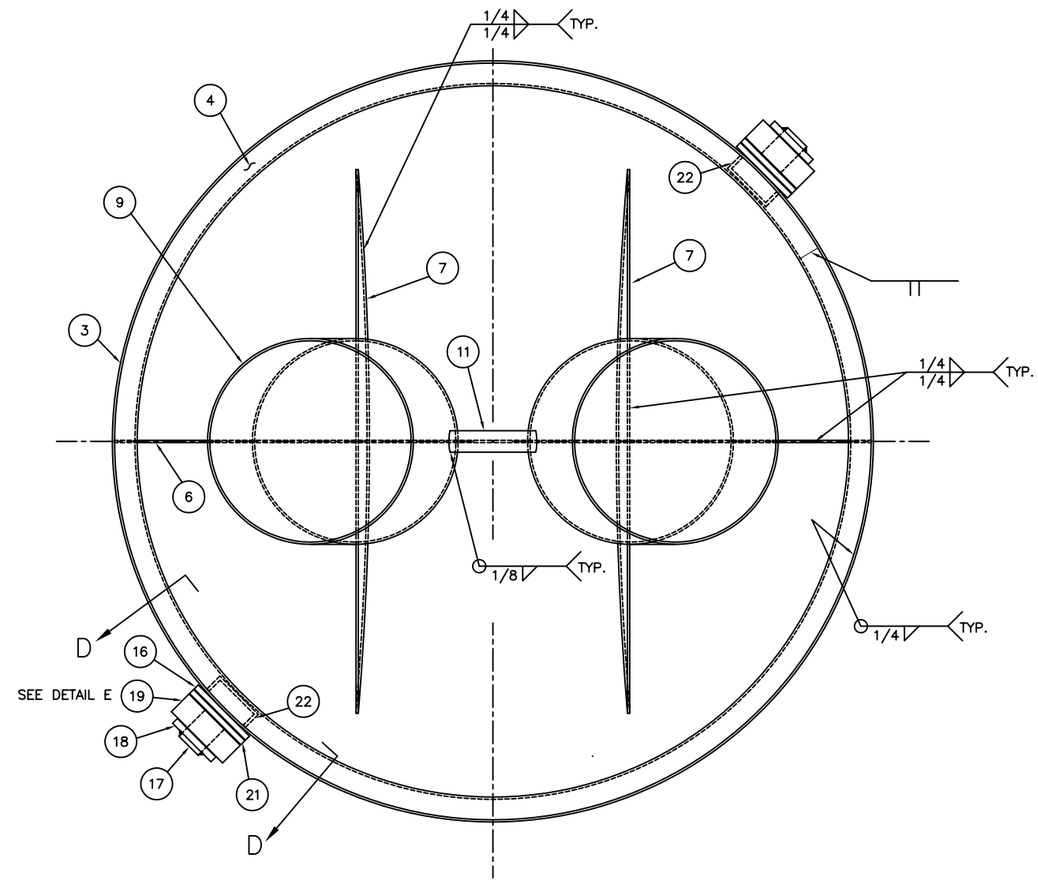

SECTION B–B

SCALE: 1 1/2"=1'–0"

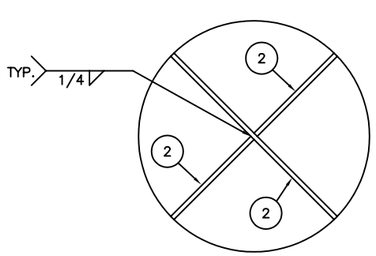

DETAIL C

SCALE: NONE

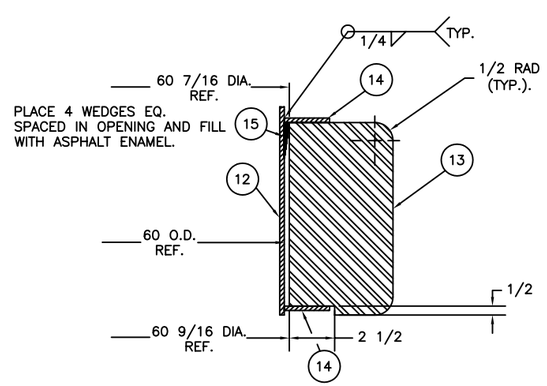

SECTION C–C

SCALE: 3"=1'–0"

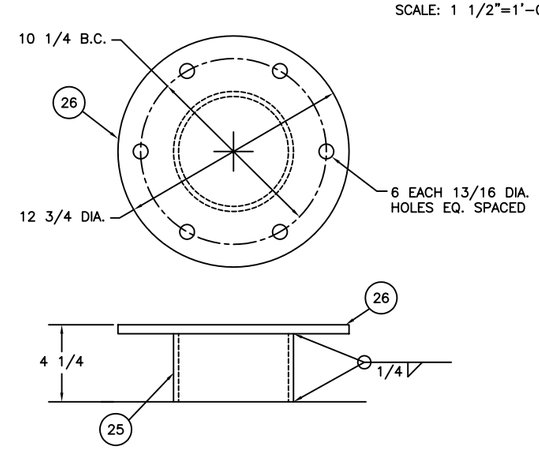

DETAIL C

SCALE: 3"=1'–0"

REV.	DATE	APPR.	DESCRIPTION	BY
G	6–4 –99	S.W.	ADDED ADDITIONAL AIR TEST FITTING (ITEMS 27 & 28).	S.M.
F	10–1 –97	S.W.	REORG DWG. DEL TOWER DETAILS. REF DWG 121176 FOR TWR. DEL 2 EA ITEM 30, 31, & 32. SHORTEN ITEM 29.	S.M.
E	12–15 –94	SW	ADDED ITEM 65 & QTY REQ FOR ITEM 57. MOD. ITEM 36.	S.M.
D	10–26 –94	SW	DEL ITEM 49. MOD ITEM 58. ADDED QTY FOR ITEM 50.	S.M.
C	1–4 –93	CAK	REPLACED 7x17 TOWER WITH THE 6x20 TOWER. LOWERED BELL STAND. REORGANIZED DRAWING.	S.M.
B	6–6 –91	SW	DELETED DETAILS 19–B, 20–A, 20–C, 20–E, 22–C, 24–B, AND 24–E.	S.M.
A	11–2 –90	CAK	ROTATED BELL STAND 30°.	S.M.

DESIGNED:
DRAWN: R.V.F.
TRACED: S.M.
CHECKED: W.E.K.

REVIEWED BY: C. A. Kohler
PROJECT ENGINEER

REVIEWED BY: S. D. Walker
G–ECV–3B

REVIEWED BY:

U.S. COAST GUARD HEADQUARTERS
CIVIL ENGINEERING

1988 TYPE 7x17 LR BUOY

APPROVED: R. J. Wells
CHIEF, OCEAN ENGINEERING BRANCH

DATE 10/5/89

UNLESS OTHERWISE SPECIFIED:
ALL DIMENSIONS ARE IN INCHES.
TOLERANCES: DIM. ±1/8
ANG. ±30'

DRAWING NUMBER 121129 REV. G

SCALE: AS NOTED SHEET 2 OF 4

PLOTTING SCALE: 1 1/2"=1'–0"

BILL OF MATERIALS

ITEM NO.	NO. REQ.	DESCRIPTION	MATL.	REMARKS
1	1	TOP HEAD	STEEL	84 DIA. x 1/4 THK.
2	4	TOP HEAD STIFFNERS	STEEL	2-1/2 x 1/4 THK.
3	1	WRAPPER	STEEL	84 DIA. x 1/4 THK.
4	1	WRAPPER STIFFNER	STEEL	2-1/2 x 2-1/2 x 1/4 L
5	1	BOTTOM HEAD	STEEL	84 DIA. x 1/4 THK.
6	1	BOTTOM HEAD STIFFNER	STEEL	11-9/16 x 1/4 THK.
7	2	POCKET BRACE	STEEL	10-1/2 x 1/4 THK.
8	2	POCKET COVER ASSEMBLY	STEEL	SEE DRAWING 121104
9	2	POCKET WRAPPER	STEEL	22 I.D. x 1/4 THK.
10	2	POCKET BOTTOM PLATE	STEEL	22 DIA. x 1/4 THK.
11	1	POCKET VENT PIPE	GAL. STEEL	2 SCH 40
12	1	COUNTERWEIGHT TUBE	STEEL	60 DIA. x 1/4 THK.
13	1	COUNTERWEIGHT	CAST IRON	SEE NOTE 2
14	2	COUNTERWEIGHT SUPPORT RING	STEEL	2-1/2 x 1/4 THK.
15	4	WEDGE	STEEL	2 x 2 x 7/32 THK.
16	2	MOORING ARM SUPPORT PLATE	STEEL	8 O.D. x 3-1/16 I.D. x 5/8 THK.
17	2	MOORING ARM PIN	STEEL	3 DIA. x 5-1/2 LG.
18	2	MOORING ARM PIN WASHER	STEEL	6 O.D. x 3-1/16 I.D. x 3/4 THK.
19	2	MOORING ARM	STEEL	2-3/4 THK.
20	2	MOORING ARM END	STEEL	4 x 4 x 2-1/2 THK.
21	2	MOORING ARM SPACER	STEEL	8 O.D. x 3-1/16 I.D. x 5/8 THK.
22	2	MOORING PIN STIFFNER	STEEL	C 6.5 x 10.5 x 20 LG.
23	4	CHAFING STRIP	STEEL	24 x 3 x 3/8 THK.
24	3	TOP HEAD LIFT EYE	STEEL	SEE DRAWING 121140
25	1	BELL STAND	STEEL	6 SCH 80
26	1	BELL STAND PLATE	STEEL	12-3/4 DIA. x 1/2 THK.
27	4	PIPE PLUG	STAIN. STEEL	3/4 NPT
28	4	HALF COUPLING	STAIN. STEEL	3/4 NPT
29	2	VENT LINE	STAIN. STEEL	3/4 SCH 40
30	2	VENT PIPE CLIP	STAIN. STEEL	5/8 x 1/16 THK.
31	2	HEX HEAD CAP SCREW	STAIN. STEEL	1/4-20UNC x 5/8 LG.
32	2	HEAVY HEX NUT	STAIN. STEEL	1/4-20UNC

NOTES:

1. SEE LATEST REVISION OF U.S.C.G. CIVIL ENGINEERING SPECIFICATION No. 464 FOR FABRICATION REQUIREMENTS
2. THE TOTAL WEIGHT OF ITEM 13 SHALL BE 3,100 LBS. (+5% OR – 1%).
3. TYPE 304 STAINLESS STEEL MAY BE SUBSTITUDED FOR ITEM 11.

REV.	DATE	APPR.	DESCRIPTION	BY
G	6-4-99	S.W.	ADDED ADDITIONAL AIR TEST FITTING (ITEMS 27 & 28).	S.M.
F	10-1-97	S.W.	REORG DWG. DEL TOWER DETAILS. REF DWG 121176 FOR TWR. DEL 2 EA ITEM 30, 31, & 32. SHORTEN ITEM 29.	S.M.
E	12-15-94	SW	ADDED ITEM 65 & QTY REQ FOR ITEM 57. MOD. ITEM 36.	S.M.
D	10-26-94	SW	DEL ITEM 49. MOD ITEM 58. ADDED QTY FOR ITEM 50.	S.M.
C	1-4-93	CAK	REPLACED 7x17 TOWER WITH THE 6x20 TOWER. LOWERED BELL STAND. REORGANIZED DRAWING.	S.M.
B	6-6-91	SW	DELETED DETAILS 19-B, 20-A, 20-C, 20-E, 22-C, 24-B, AND 24-E.	S.M.
A	11-2-90	CAK	ROTATED BELL STAND 30°.	S.M.

DESIGNED:
DRAWN: R.V.F.
TRACED: S.M.
CHECKED: W.E.K.

REVIEWED BY: C. A. Kohler
PROJECT ENGINEER

REVIEWED BY: S. D. Walker
G-ECV-3B

REVIEWED BY:

U.S. COAST GUARD HEADQUARTERS
CIVIL ENGINEERING

1988 TYPE 7x17 LR BUOY

APPROVED: R. J. Wells
CHIEF, OCEAN ENGINEERING BRANCH

DATE: 10/5/89

UNLESS OTHERWISE SPECIFIED:
ALL DIMENSIONS ARE IN INCHES.
TOLERANCES: DIM. ±1/8
ANG. ±30'

DRAWING NUMBER: 121129 REV. G

SCALE: AS NOTED SHEET 4 OF 4

PLOTTING SCALE: 12"=1'-0"