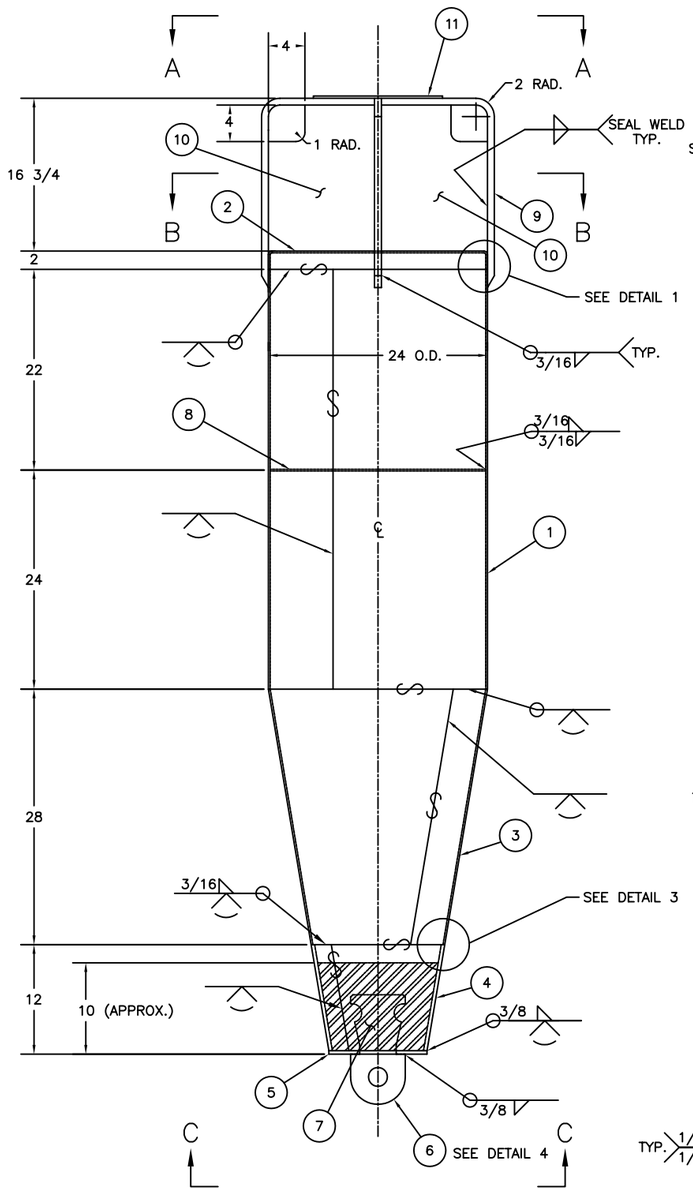

5CR

SCALE: 1-1/2"=1'-0"

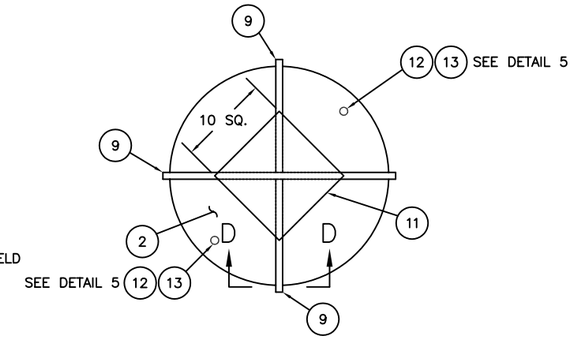

SECTION A-A

SCALE: 1-1/2"=1'-0"

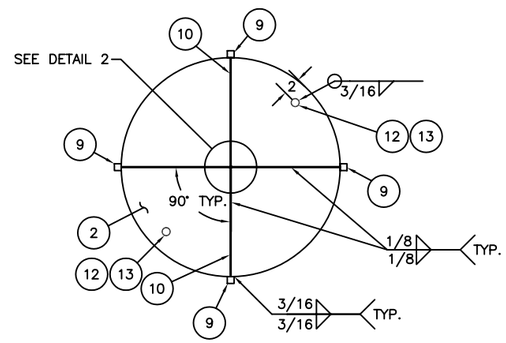

SECTION B-B

SCALE: 1-1/2"=1'-0"

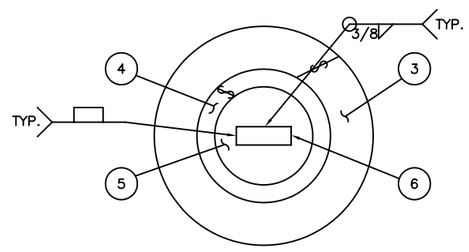

SECTION C-C

SCALE: 1-1/2"=1'-0"

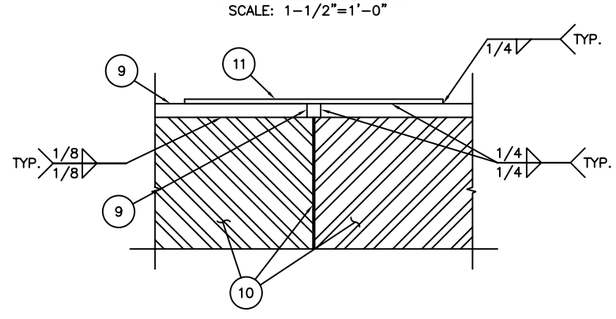

SECTION D-D

SCALE: 3"=1'-0"

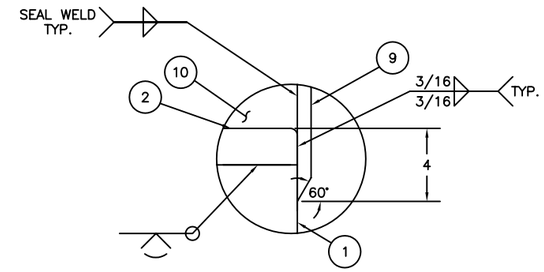

DETAIL 1

SCALE: 3"=1'-0"

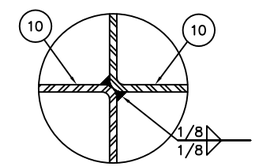

DETAIL 2

SCALE: FULL

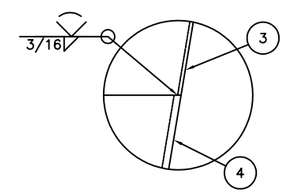

DETAIL 3

SCALE: 3"=1'-0"

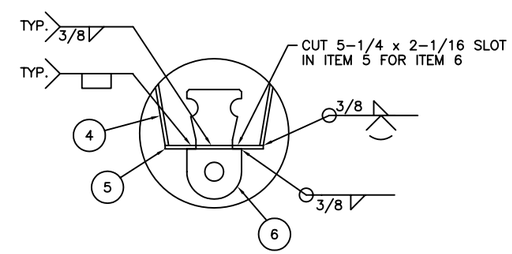

DETAIL 4

SCALE: 1-1/2"=1'-0"

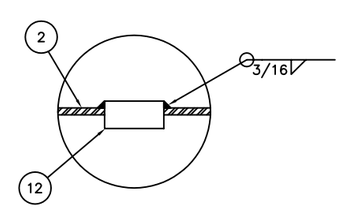

DETAIL 5

SCALE: HALF

BILL OF MATERIALS

ITEM NO.	NO. REQ.	DESCRIPTION	MATL.	REMARKS
1	1	BUOY WRAPPER	STEEL	3/16 THK.
2	1	FLANGED HEAD	STEEL	3/16 THK.
3	1	CONICAL WRAPPER	STEEL	3/16 THK.
4	1	COUNTERWEIGHT WRAPPER	STEEL	3/8 THK.
5	1	BOTTOM PLATE	STEEL	10-3/4 O.D. x 3/8 THK.
6	1	MOORING EYE	STEEL	SEE DWG. 121153
7	1	COUNTERWEIGHT	CAST IRON	SEE NOTE 2
8	1	WRAPPER STIFFENER	STEEL	2 WD. x 3/16 THK.
9	3	RADAR REFLECTOR SUPPORT	STEEL	3/4 SQ.
10	2	VERTICAL RADAR REFLECTOR	STEEL	12 GA.
11	1	TOP PLATE	STEEL	10 SQ. x 1/4 THK.
12	2	HALF COUPLING	STAIN. STEEL	3/4 I.P.S.
13	2	PIPE PLUG	STAIN. STEEL	3/4 I.P.S. HEX HD.

NOTES:

1. SEE LATEST REVISION OF U.S.C.G. CIVIL ENGINEERING SPECIFICATION No. 464 FOR FABRICATION REQUIREMENTS.
2. THE TOTAL WEIGHT OF ITEMS 4, 5, 6, AND 7 SHALL BE 340 LBS. (+5%, -1%)

REV.	DATE	APPR.	DESCRIPTION	BY
B	6-4-99	S.W.	ADDED ADDITIONAL AIR TEST FITTING (ITEMS 12 & 13).	S.M.
A	2-7-97	S.W.	MOD WELDS TO RADAR REFLECTOR.	S.M.

DESIGNED: S.M.
DRAWN: S.M.
TRACED:
CHECKED:
REVIEWED BY: Sean McEvoy, PROJECT ENGINEER
REVIEWED BY: S. D. Walker, G-SEC-2B
REVIEWED BY: L. E. Jaeger, G-SEC-2

U.S. COAST GUARD HEADQUARTERS
CIVIL ENGINEERING

1994 TYPE FIFTH CLASS CAN BUOY (5CR)

APPROVED: W. E. Kozak, CHIEF, OFFICE OF CIVIL ENGINEERING
DATE: 8/8/94

UNLESS OTHERWISE SPECIFIED:
ALL DIMENSIONS ARE IN INCHES.
TOLERANCES: DIM. ±1/8
ANG. ±1°

DRAWING NUMBER: 121164
REV. B
SCALE: AS NOTED
SHEET 1 OF 1

PLOTTING SCALE: 1-1/2"=1'-0"