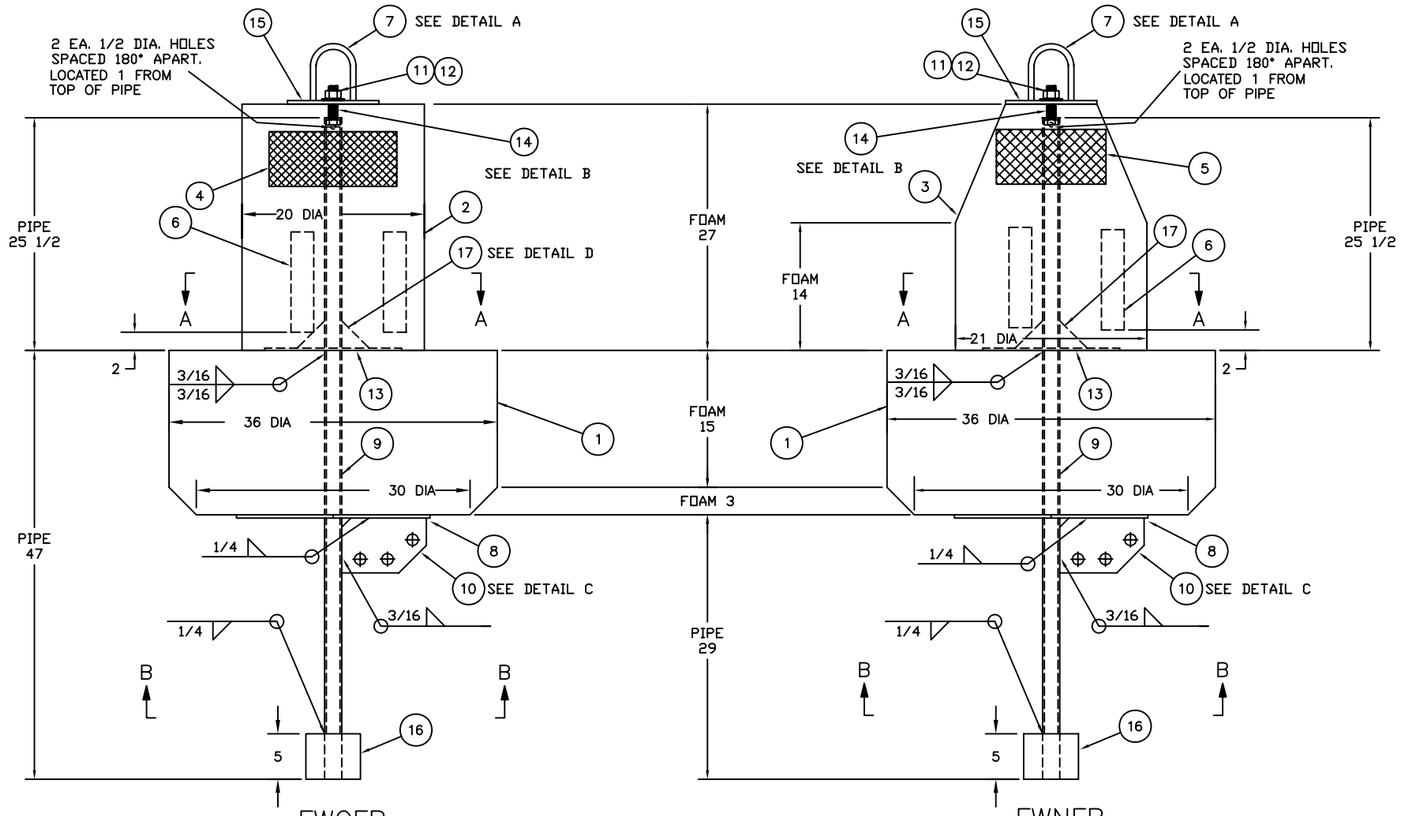

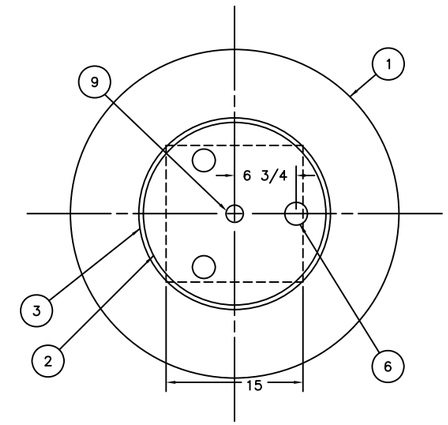

SECTION A–A
1 1/2"=1'-0"

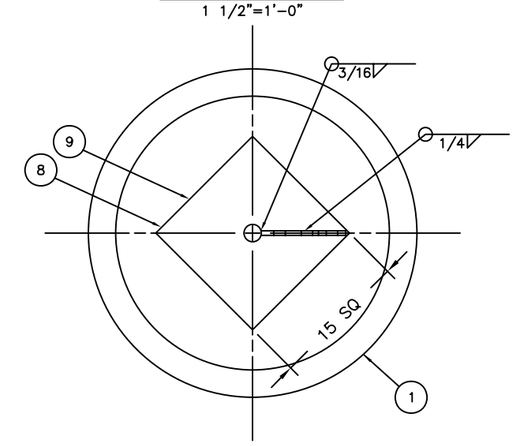

SECTION B–B
1 1/2"=1'-0"

REV.	DATE	APPR.	DESCRIPTION	BY
D	5–15–07	S.W.	CHANGED ITEMS 1, 2 & 3 FROM 3 PCF TO 4 PCF.	S.M.
C	5–31–02	W.D.	INCREASED LENGTH OF ITEM 9. ADDED ITEMS 16 AND 17.	K.W.
B	1–5–99	S.W.	REORGANIZED NOTES. MOD QTY OF ITEM 6.	S.M.
A	1–22–97	S.W.	ADDED ITEM 15. MODIFIED NOTES 2 & 5. MODIFIED ITEMS 9, 10, 12, 14, & 15.	C.B.

DESIGNED: D.B.
DRAWN: D.B.
TRACED: S.M.
CHECKED: S.M.
REVIEWED BY: D. Braganza, PROJECT ENGINEER
REVIEWED BY: S. McEvoy, G–ECV–3B
REVIEWED BY: S.D. Walker

U.S. COAST GUARD HEADQUARTERS
CIVIL ENGINEERING

FWCFR AND FWFNR UNLIGHTED FOAM BUOY

APPROVED: L. E. Jaeger, CHIEF OF OCEAN ENGINEERING BRANCH
DATE: 08–30–95

UNLESS OTHERWISE SPECIFIED:
ALL DIMENSIONS ARE IN INCHES.
TOLERANCES: DIM. ±1/8
ANG. ±1°

DRAWING NUMBER: 121170
REV. D
SCALE: AS NOTED
SHEET 1 OF 2

PLOTTING SCALE: 1–1/2"=1'–0"