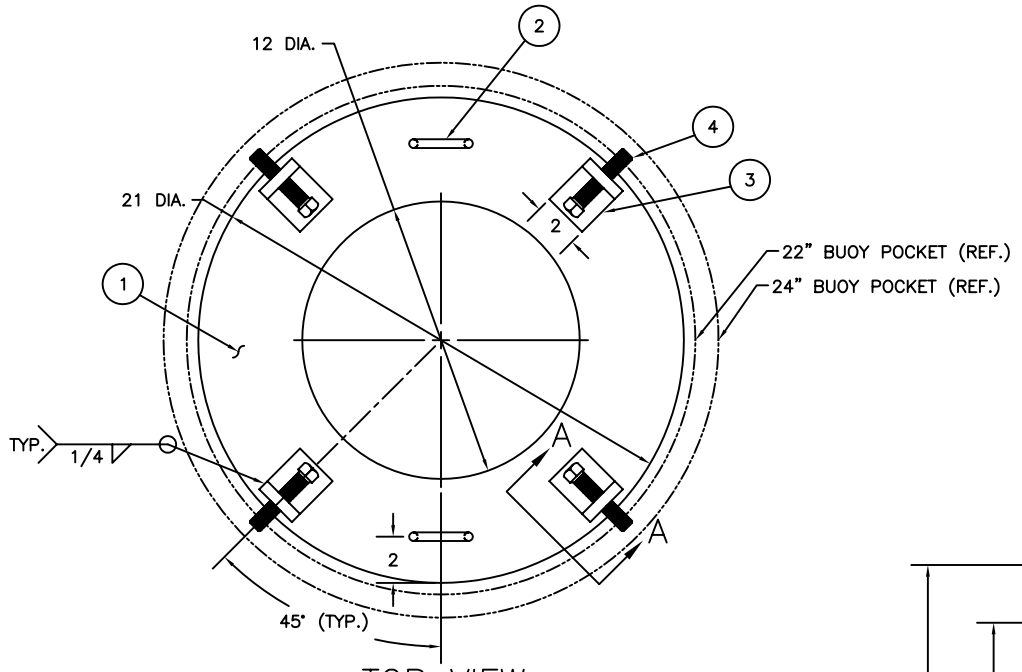

TOP VIEW

SCALE: 3"=1'-0"

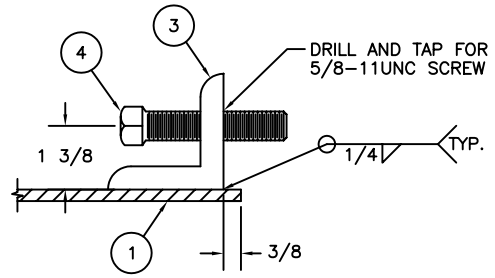

SECTION A-A

SCALE: 3"=1'-0"

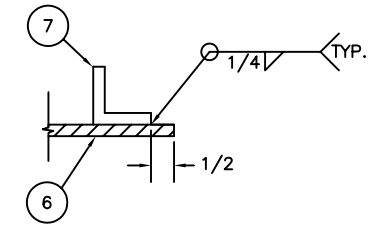

SECTION D-D

SCALE: HALF

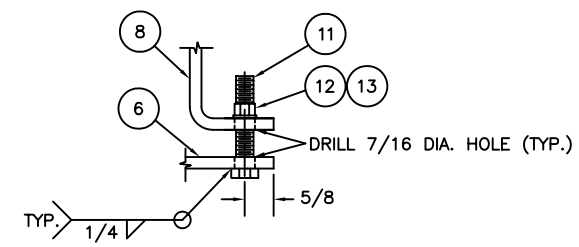

SECTION E-E

SCALE: HALF

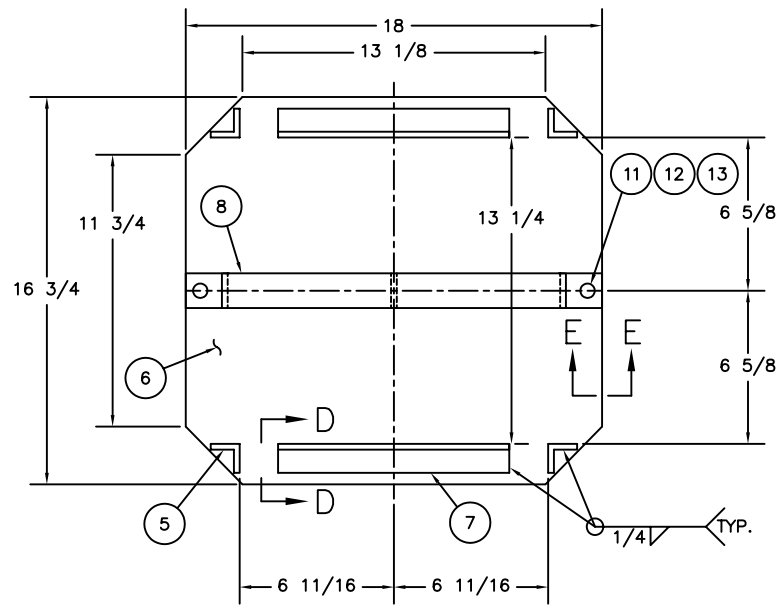

SECTION B-B

SCALE: 3"=1'-0"

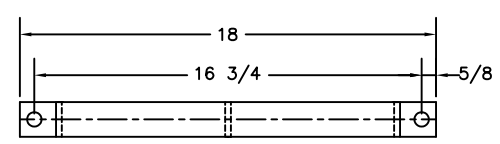

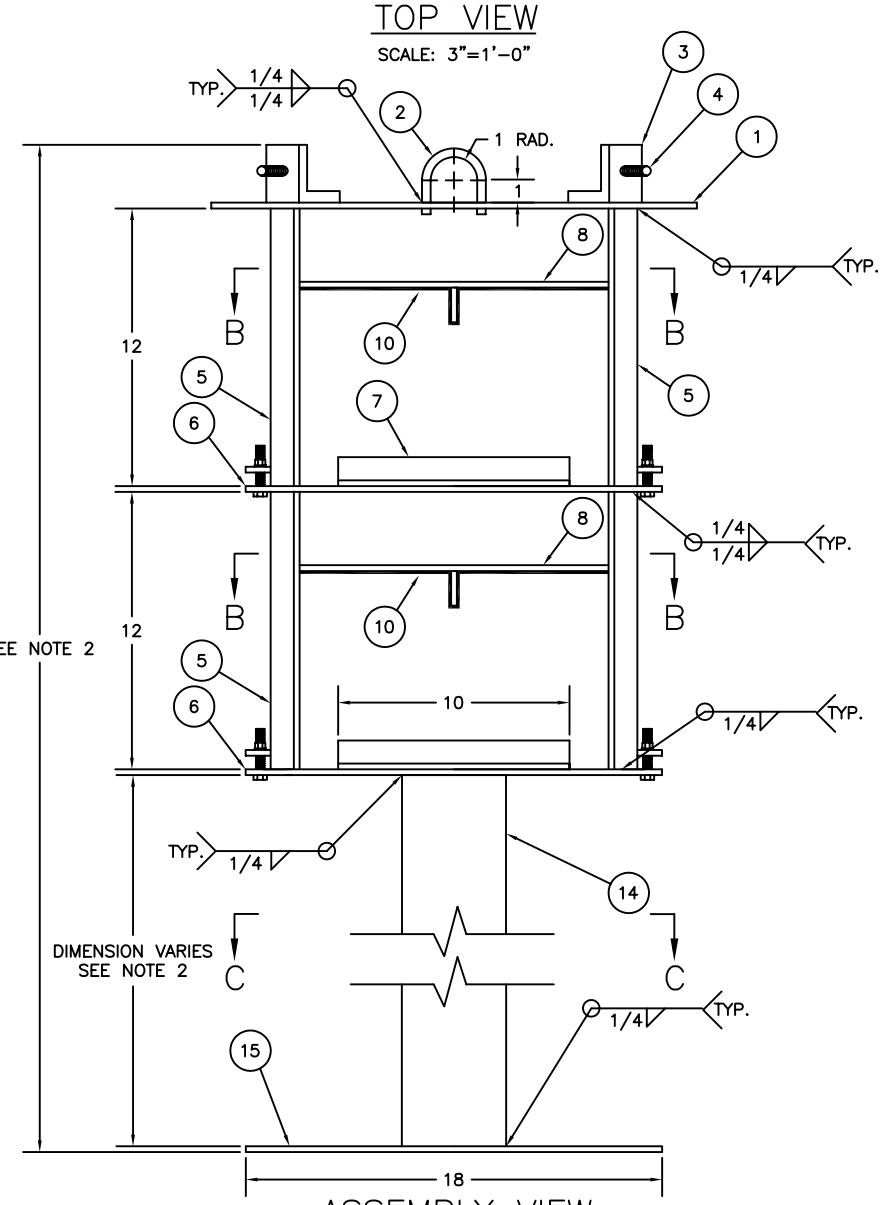

ASSEMBLY VIEW

SCALE: 3"=1'-0"

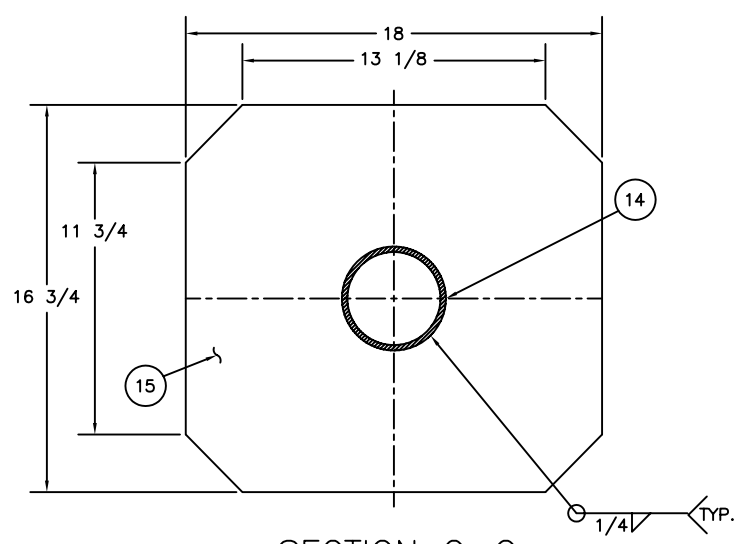

SECTION C-C

SCALE: 3"=1'-0"

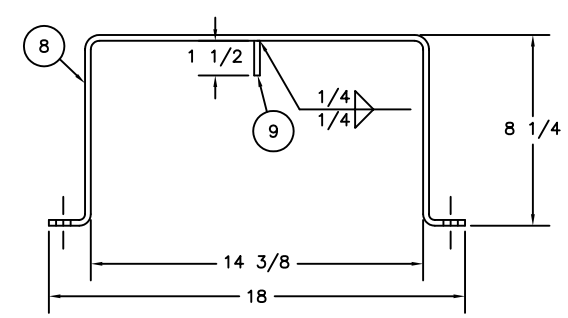

DETAIL A

SCALE: 3"=1'-0"
(FOR CLARITY, ITEM 13 NOT SHOWN)

BILL OF MATERIALS

	ITEM NO.	NO. REQ.	DESCRIPTION	MATL.	REMARKS
	1	1	TOP PLATE	STEEL	21 OD x 12 ID x 1/4 THK.
	2	2	LIFT EYE	STEEL	3/8 DIA. ROD
	3	4	SET SCREW MOUNT	STEEL	2-1/2 x 2-1/2 x 1/2 L
	4	4	SQUARE HEAD SET SCREW	STAIN. STEEL	5/8-11UNC x 3 LG. FULLY THREADED
1.	5	8	LEG ANGLE	STEEL	1-1/4 x 1-1/4 x 1/4 L
1.	6	2	BATTERY PLATE	STEEL	18 x 16-3/4 x 1/4 THK.
1.	7	4	SIDE ANGLE	STEEL	1-1/4 x 1-1/4 x 1/4 L
1.	8	2	HOLD DOWN BAR	STEEL	1-1/2 x 1/4 THK.
1.	9	2	HOLD DOWN TAB	STEEL	1-1/2 x 1/4 THK.
1.	10	2	BATTERY CUSHION	NEOPRENE	1-1/2 x 3/16 THK.
1.	11	4	HEX HEAD BOLT	STAIN. STEEL	3/8-16UNC x 2 LG. FULLY THREADED
1.	12	4	SPLIT RING LOCK WASHER	STAIN. STEEL	3/8 NOM.
1.	13	4	HEX NUT	STAIN. STEEL	3/8 -16UNC
	14	1	SUPPORT PIPE	STEEL	4 SCH. 40 PIPE SEE NOTE 2
	15	1	BASE PLATE	STEEL	18 x 16-3/4 x 1/4 THK.

NOTES:

1. THE ASSEMBLY VIEW SHOWS A BATTERY RACK THAT CAN ACCOMMODATE 4 BATTERIES. RACKS CAPABLE OF ACCOMMODATING 6 OR 8 BATTERIES MAY BE FABRICATED BY SHORTENING THE SUPPORT PIPE (ITEM 14) AND ADDING ADDITIONAL BATTERY "MODULES" (ITEMS 5-13).

2. THE LENGTH OF ITEM 14 VARIES DEPENDING ON THE NUMBER OF BATTERIES AND THE BUOY TYPE. THE TABLE BELOW SPECIFIES THE PIPE LENGTH FOR VARIOUS SIZED RACKS FOR EACH BUOY TYPE:

BUOY TYPE	OVERALL RACK LENGTH	PIPE LENGTH (ITEM 14) 4 BATTERY RACK	6 BATTERY RACK	8 BATTERY RACK
9x35LWR	89 1/2"	62"	49 3/4"	37 1/2"
9x32LR	81 1/2"	54"	41 3/4"	29 1/2"
8x26LR/LWR	73 1/2"	46"	33 3/4"	21 1/2"
8x21LR	58 1/2"	31"	18 3/4"	6 1/2"
7x17LR	58 1/2"	31"	18 3/4"	6 1/2"
6x20LR	58 1/2"	31"	18 3/4"	6 1/2"

3. APPLY EPOXY PRIMER IN ACCORDANCE WITH THE COATINGS SECTION OF THE LATEST REVISION OF U.S. COAST GUARD CIVIL ENGINEERING SPECIFICATION 464, " FABRICATION OF STEEL OCEAN BUOYS".

REV.	DATE	APPR.	DESCRIPTION	BY
A	4-15-05	WD	MODIFIED DIMENSIONS OF ITEM 5.	S.M.

DESIGNED: S.M.
DRAWN: S.M.
TRACED:
CHECKED:
REVIEWED BY: Sean McEvoy, PROJECT ENGINEER
REVIEWED BY: S. D. Walker, G-SEC-2B
REVIEWED BY: R. J. Legier, G-SEC-2

U.S. COAST GUARD HEADQUARTERS
CIVIL ENGINEERING

22" & 24" BUOY POCKET BATTERY RACK

APPROVED: J. A. Rauch, CHIEF, OFFICE OF CIVIL ENGINEERING
DATE: 6/29/98

UNLESS OTHERWISE SPECIFIED:
ALL DIMENSIONS ARE IN INCHES.
TOLERANCES: DIM. ±1/8
ANG. ±1°

DRAWING NUMBER: 121178
REV. A
SCALE: AS NOTED
SHEET 1 OF 1

PLOTTING SCALE: 3"=1'-0"