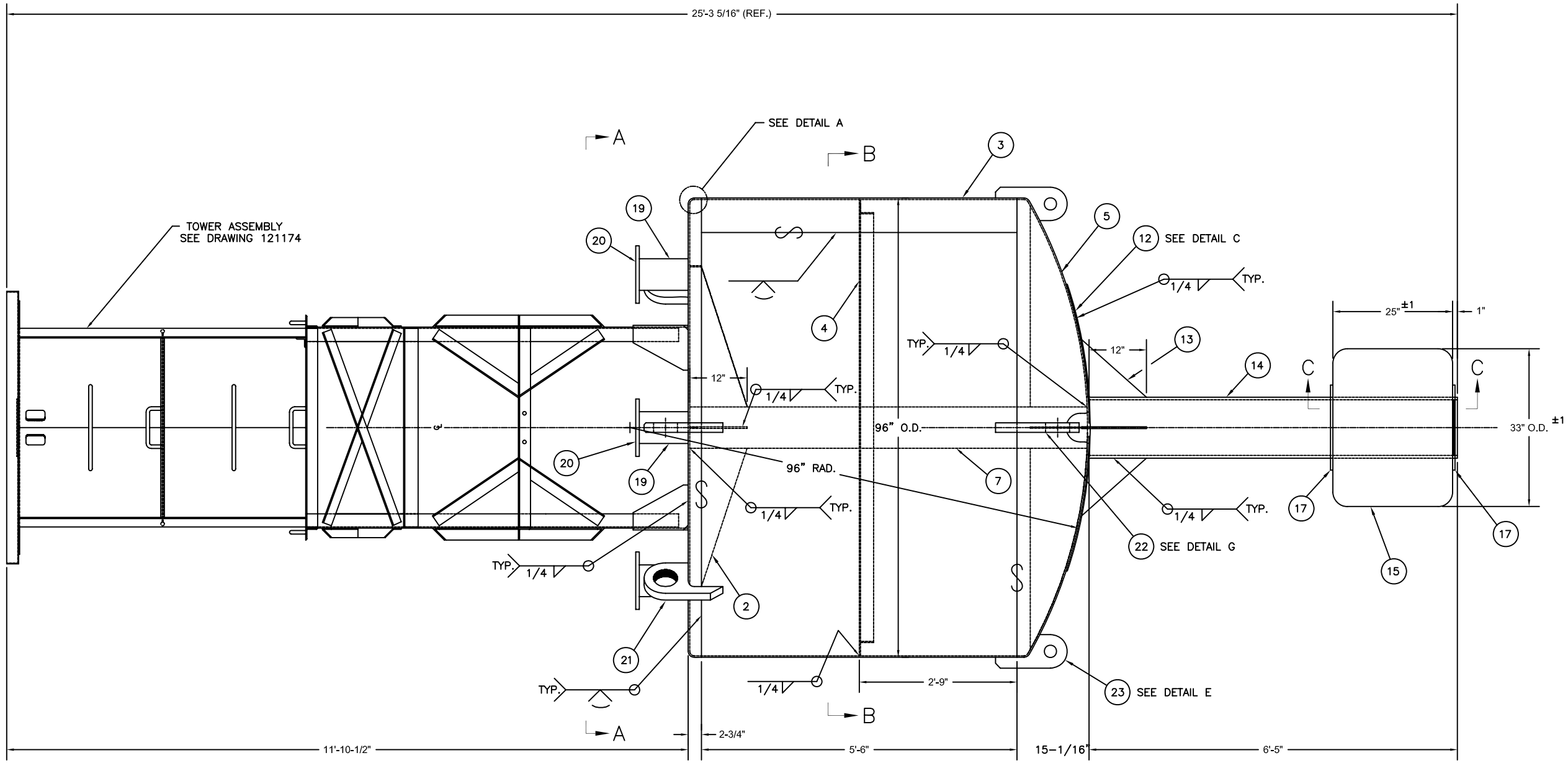

8x26 LR BUOY ASSEMBLY

SCALE: 1"=1'-0"

REV.	DATE	APPR.	DESCRIPTION	BY

DESIGNED: S.M.
DRAWN: S.M.
TRACED:
CHECKED:
REVIEWED BY: Sean McEvoy
PROJECT ENGINEER
REVIEWED BY: Wayne Danzik
G-SEC-2B
REVIEWED BY:

U.S. COAST GUARD HEADQUARTERS
OCEAN ENGINEERING

2005 TYPE
8x26LRX BUOY

APPROVED: Harley Cleveland
CHIEF OF DIVISION
DATE 4/27/2005

UNLESS OTHERWISE SPECIFIED:
ALL DIMENSIONS ARE IN INCHES.
TOLERANCES: DIM. ?/8
ANG. ?°

DRAWING NUMBER 121183
REV.
SCALE: AS NOTED
SHEET 1 OF 4

PLOTTING SCALE: 1"=1'-0"

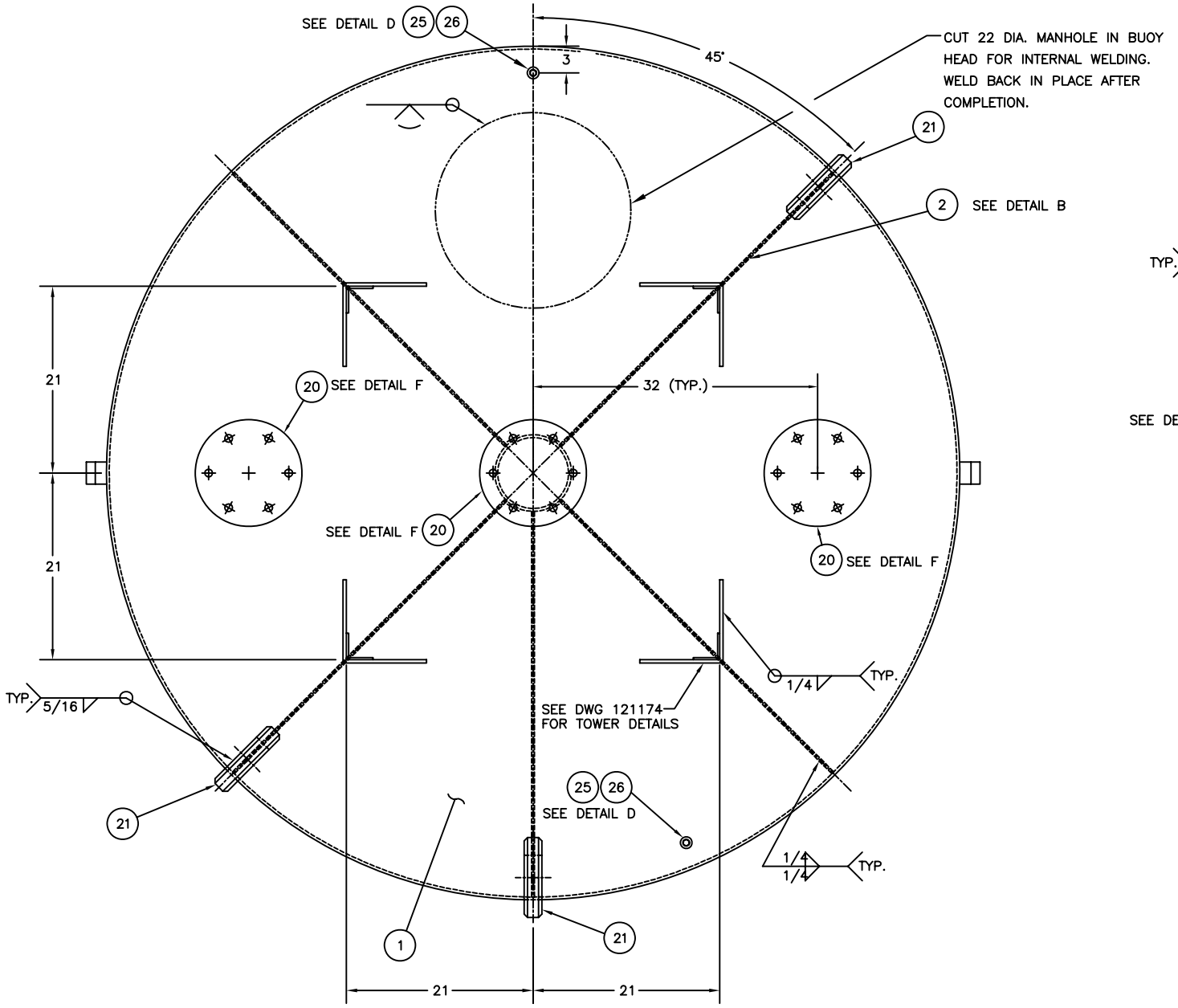

SECTION A–A

SCALE: 1 1/2"=1'–0"

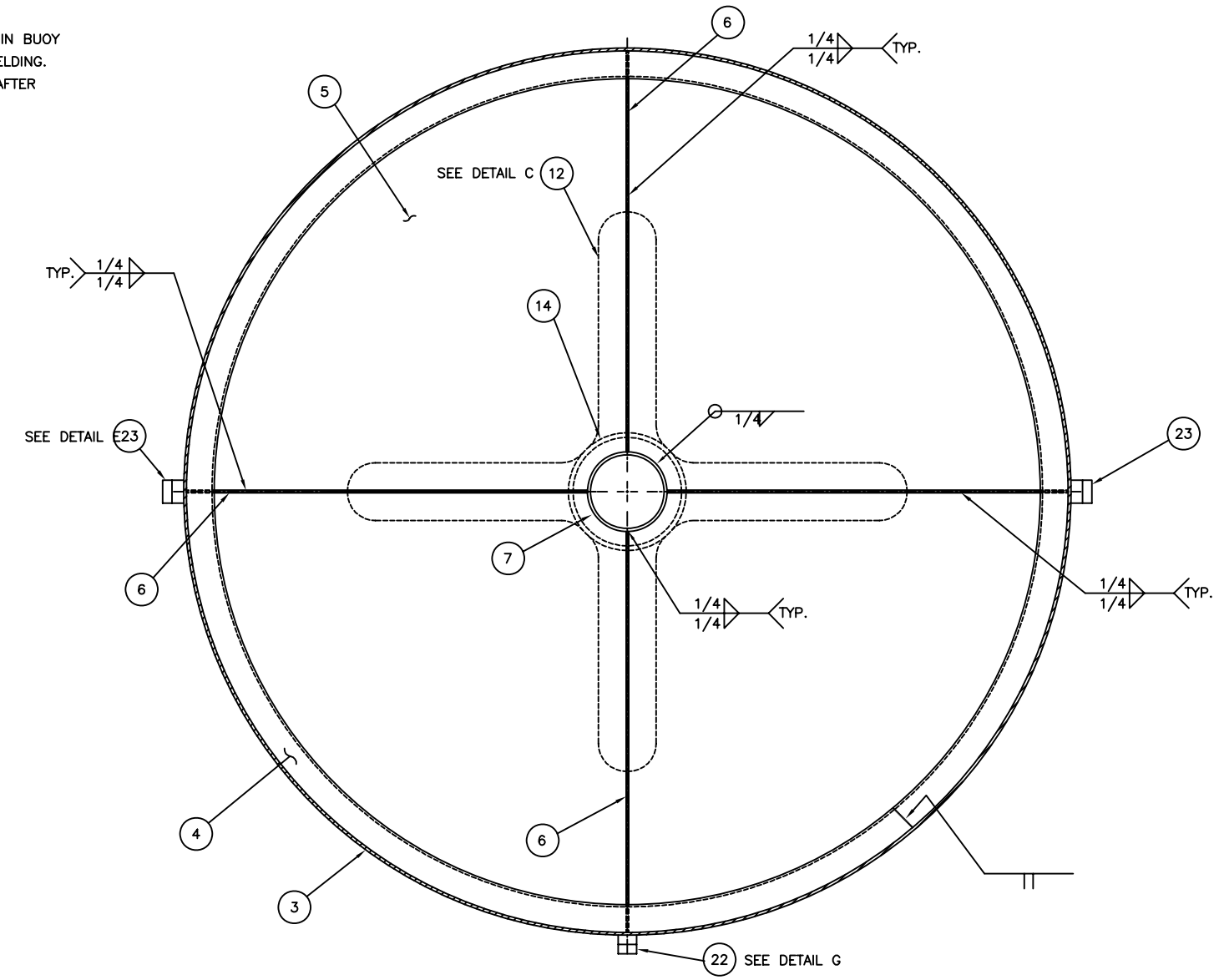

SECTION B–B

SCALE: 1 1/2"=1'–0"

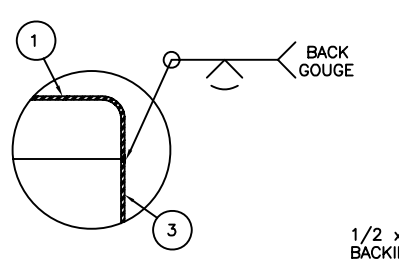

DETAIL A

SCALE: NONE

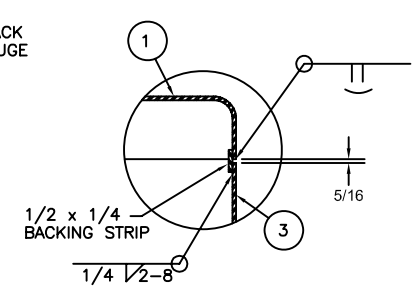

DETAIL A

SCALE: NONE
OPTIONAL

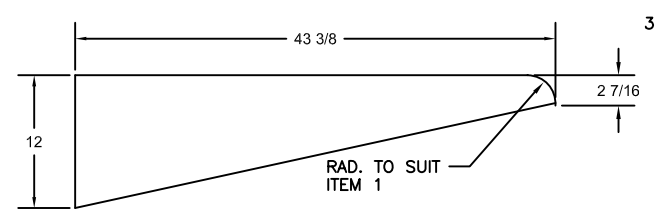

2 DETAIL B

SCALE: 1–1/2"=1'–0"

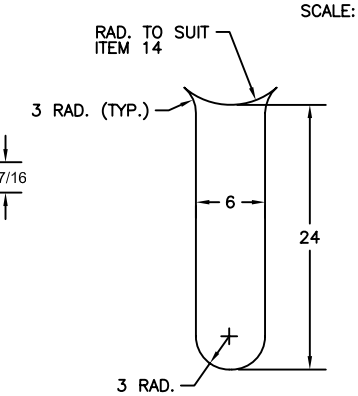

12 DETAIL C

SCALE: 1 1/2"=1'–0"

REV.	DATE	APPR.	DESCRIPTION	BY

DESIGNED: S.M.
DRAWN: S.M.
TRACED:
CHECKED:
REVIEWED BY: Sean McEvoy
PROJECT ENGINEER
REVIEWED BY: Wayne Danzik
G-SEC-2B
REVIEWED BY:

U.S. COAST GUARD HEADQUARTERS

OCEAN ENGINEERING

2005 TYPE
8x26LRX BUOY

APPROVED: Harley Cleveland
CHIEF OF DIVISION
DATE 4/27/2005

UNLESS OTHERWISE SPECIFIED:
ALL DIMENSIONS ARE IN INCHES.
TOLERANCES: DIM. ±1/8
ANG. ±1°

DRAWING NUMBER 121183
REV.
SCALE: AS NOTED
SHEET 2 OF 4

PLOTTING SCALE: 1–1/2"=1'–0"

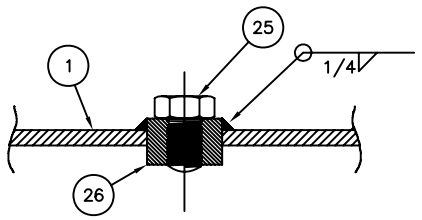

DETAIL D

SCALE: HALF

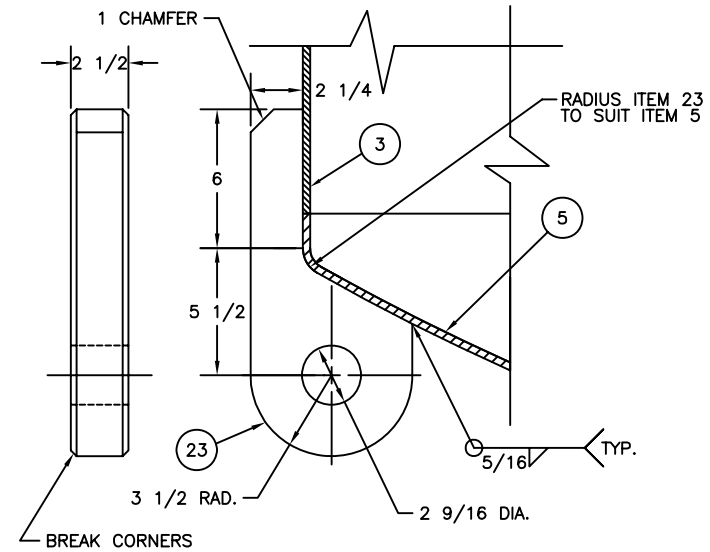

DETAIL E

SCALE: 3"=1'-0"

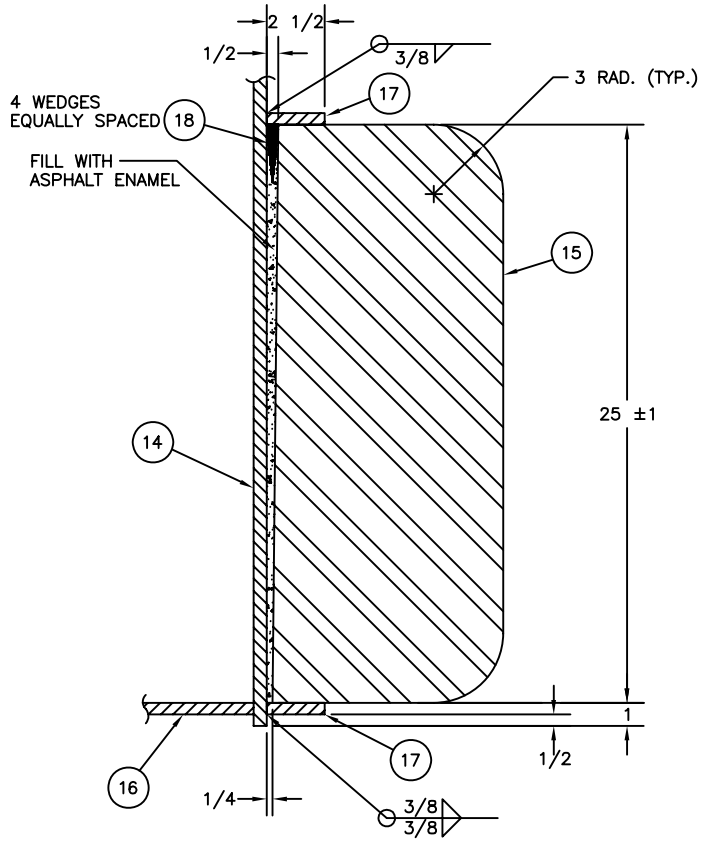

SECTION C-C

SCALE: 3"=1'-0"

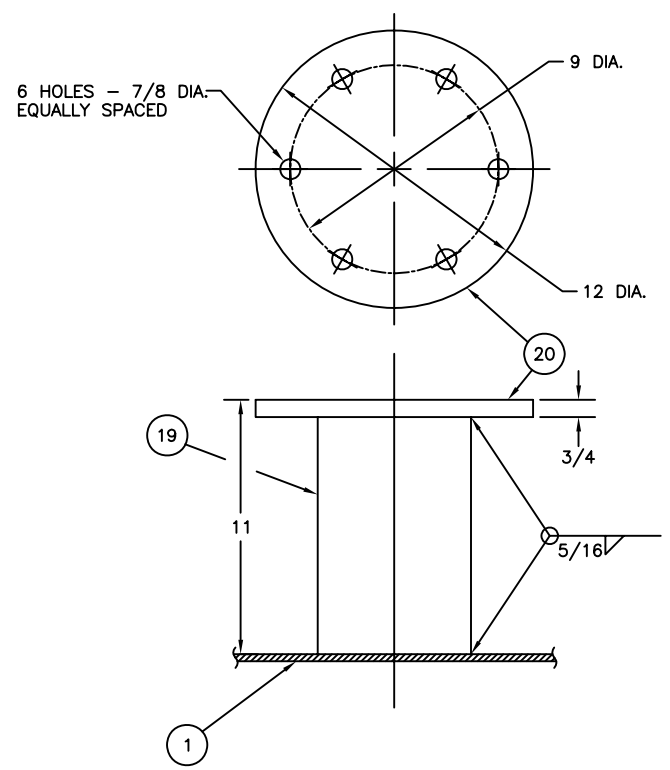

DETAIL F

SCALE: 3"=1'-0"

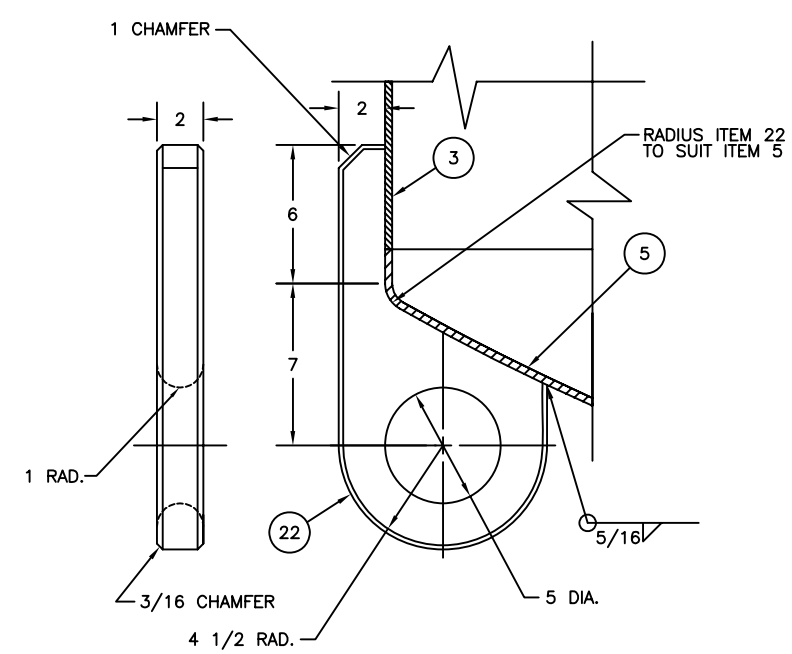

DETAIL G

SCALE: 3"=1'-0"

REV.	DATE	APPR.	DESCRIPTION	BY

DESIGNED: S.M.
DRAWN: S.M.
TRACED:
CHECKED:
REVIEWED BY: Sean McEvoy
PROJECT ENGINEER
REVIEWED BY: Wayne Danzik
G-SEC-2B
REVIEWED BY:

U.S. COAST GUARD HEADQUARTERS

OCEAN ENGINEERING

2005 TYPE
8x26LRX BUOY

APPROVED: Harley Cleveland
CHIEF OF DIVISION
DATE 4/27/2005

UNLESS OTHERWISE SPECIFIED:
ALL DIMENSIONS ARE IN INCHES.
TOLERANCES: DIM. ±1/8
ANG. ±1°

DRAWING NUMBER 121183
REV.
SCALE: AS NOTED
SHEET 3 OF 4

PLOTTING SCALE: 1-1/2"=1'-0"

BILL OF MATERIALS

ITEM NO.	NO. REQ.	DESCRIPTION	MATL.	REMARKS
1	1	TOP HEAD	STEEL	96 DIA. x 5/16 THK.
2	5	TOP HEAD STIFFNER	STEEL	12 x 5/16 THK.
3	1	WRAPPER	STEEL	96 DIA. x 5/16 THK.
4	1	WRAPPER STIFFNER	STEEL	3 x 3 x 1/4 L
5	1	BOTTOM HEAD	STEEL	96 DIA. x 5/16 THK.
6	4	BOTTOM HEAD STIFFNER	STEEL	12 x 1/4 THK.
7	1	CENTER PIPE	STEEL	8 SCH 40 PIPE
8				
9				
10				
11				
12	4	DOUBLER PLATE	STEEL	6 x 3/8 THK. x 24 LG.
13	4	GUSSET	STEEL	12 x 3/8 THK.
14	1	COUNTERWEIGHT TUBE	STEEL	12 XS PIPE
15	1	COUNTERWEIGHT	CAST IRON	SEE NOTE 2
16	1	COUNTERWEIGHT BOTTOM PLATE	STEEL	11 3/4 DIA x 1/2 THK
17	2	COUNTERWEIGHT CLAMP RING	STEEL	17 3/4 O.D. x 12 3/4 ID x 1/2 THK
18	4	WEDGE	STEEL	1 WD. x 1/2 THK. x 2 1/2 LG.
19	3	BELL STAND	STEEL	6 SCH. 80 PIPE
20	3	BELL STAND PLATE	STEEL	12 DIA. x 3/4 THK.
21	3	TOP HEAD LIFT EYE	STEEL	SEE DRAWING 121140
22	1	BOTTOM HEAD LIFT EYE	STEEL	2 THK. PLATE
23	2	MOORING EYE	STEEL	2 1/2 THK. PLATE
24				
25	2	PIPE PLUG	STAIN. STEEL	3/4 NPT
26	2	HALF COUPLING	STAIN. STEEL	3/4 NPT
27				
28				
29				

NOTES:

1. SEE LATEST REVISION OF U.S.C.G. CIVIL ENGINEERING SPECIFICATION No. 464 FOR FABRICATION REQUIREMENTS.
2. THE TOATAL WEIGHT OF ITEM 15 SHALL BE 4,420 LBS. (+5% OR −1%).
3. TYPE 304 STAINLESS STEEL MAY BE SUBSTITUTED FOR ITEM 11.

REV.	DATE	APPR.	DESCRIPTION	BY

DESIGNED: S.M.
DRAWN: S.M.
TRACED:
CHECKED:
REVIEWED BY: Sean McEvoy
PROJECT ENGINEER
REVIEWED BY: Wayne Danzik
G-SEC-2B
REVIEWED BY:

U.S. COAST GUARD HEADQUARTERS
OCEAN ENGINEERING

2005 TYPE
8x26LRX BUOY

APPROVED: Harley Cleveland
CHIEF OF DIVISION
DATE 4/27/2005

UNLESS OTHERWISE SPECIFIED:
ALL DIMENSIONS ARE IN INCHES.
TOLERANCES: DIM. ±1/8
ANG. ±1°

DRAWING NUMBER 121183
REV.
SCALE: NONE
SHEET 4 OF 4

PLOTTING SCALE: 12"=1'-0"