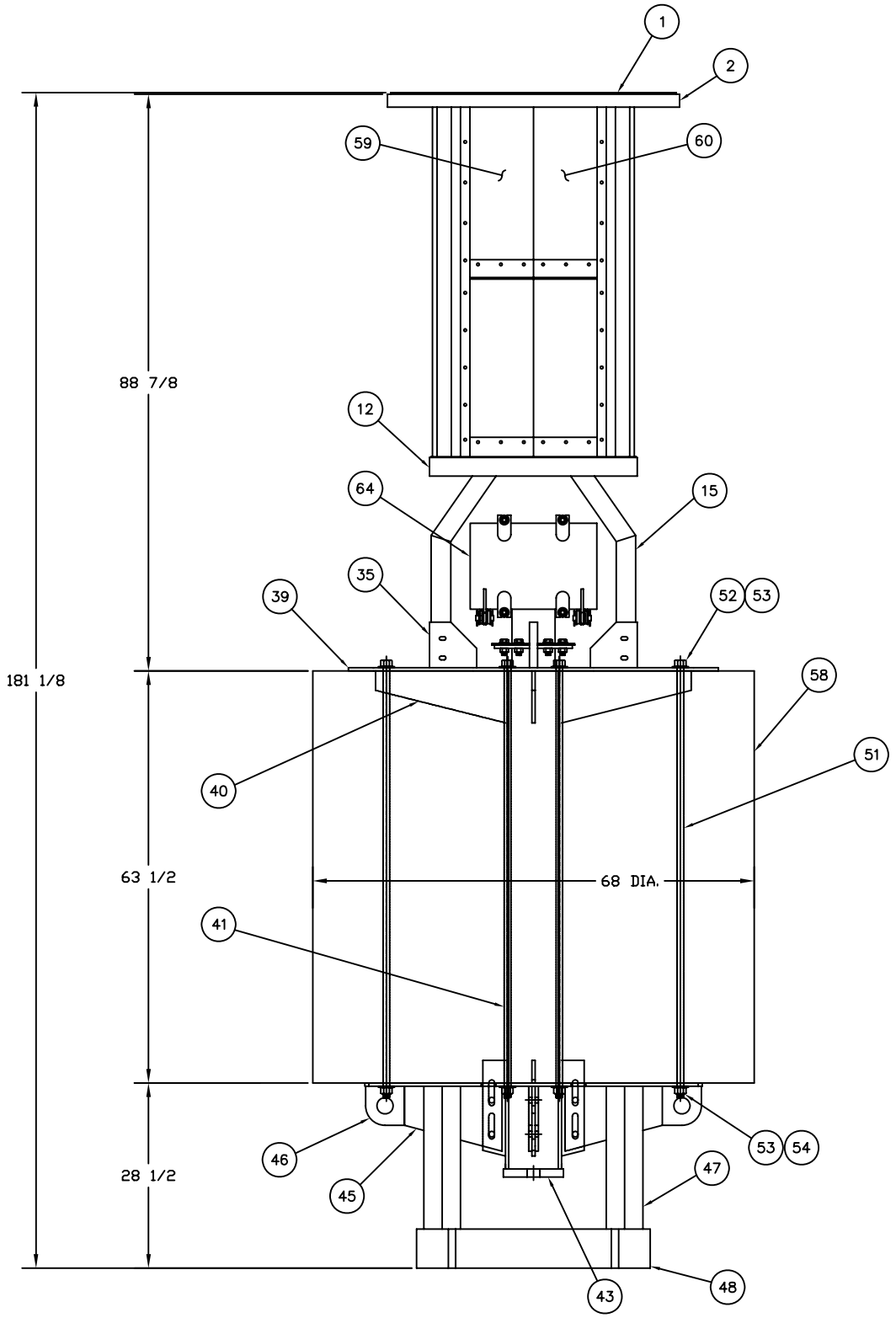

6x16 LFR
ASSEMBLY VIEW
SCALE: 1"=1'-0"

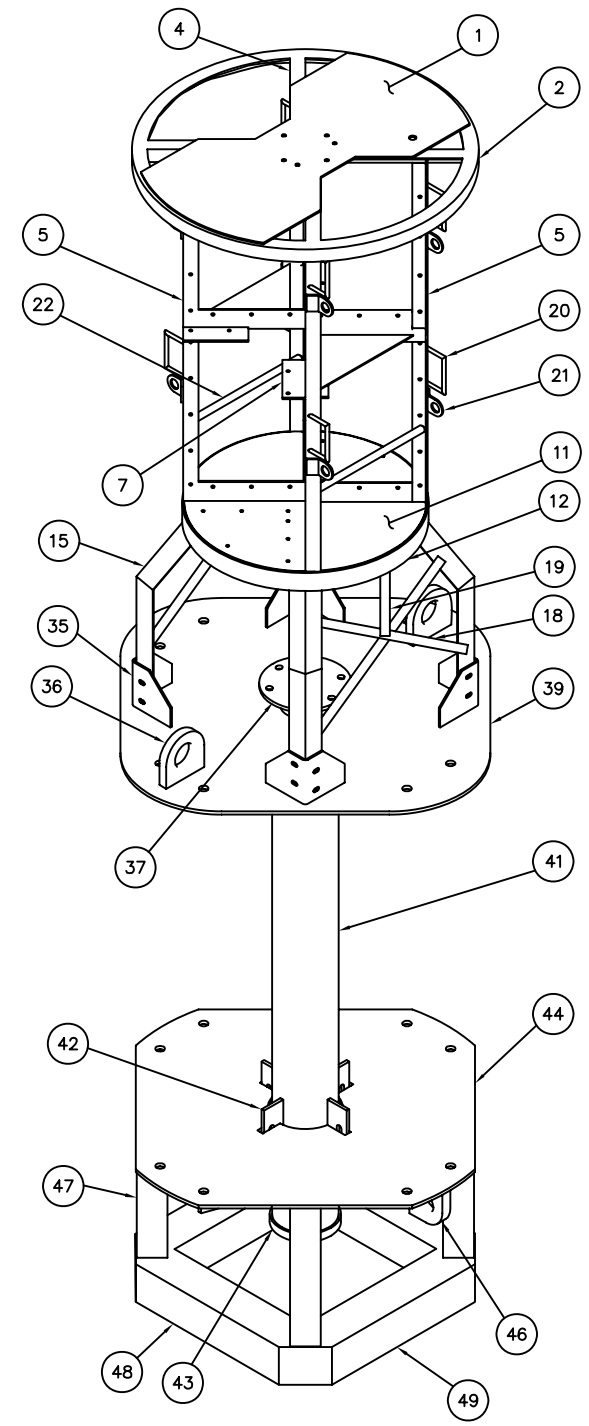

6x16 LFR
ISOMETRIC STRUCTURAL VIEW
SCALE: NONE

REV.	DATE	APPR.	DESCRIPTION	BY

DESIGNED:
DRAWN: S.M.
TRACED:
CHECKED:
REVIEWED BY: Sean McEvoy, PROJECT ENGINEER
REVIEWED BY: Dianna Bo, CG-432B
REVIEWED BY: S.D. Walker, CG-432

U.S. COAST GUARD — HEADQUARTERS
CIVIL ENGINEERING

2007 TYPE
6x16 LFR BUOY

APPROVED: S.D. Walker, acting
CHIEF, OFFICE OF CIVIL ENGINEERING
DATE: 12/11/07

UNLESS OTHERWISE SPECIFIED:
ALL DIMENSIONS ARE IN INCHES.
TOLERANCES: DIM. ±1/32
ANG. ±1°

DRAWING NUMBER: 121184
REV.
SCALE: NONE
SHEET 1 OF 10

PLOTTING SCALE: 1"=1'-0"

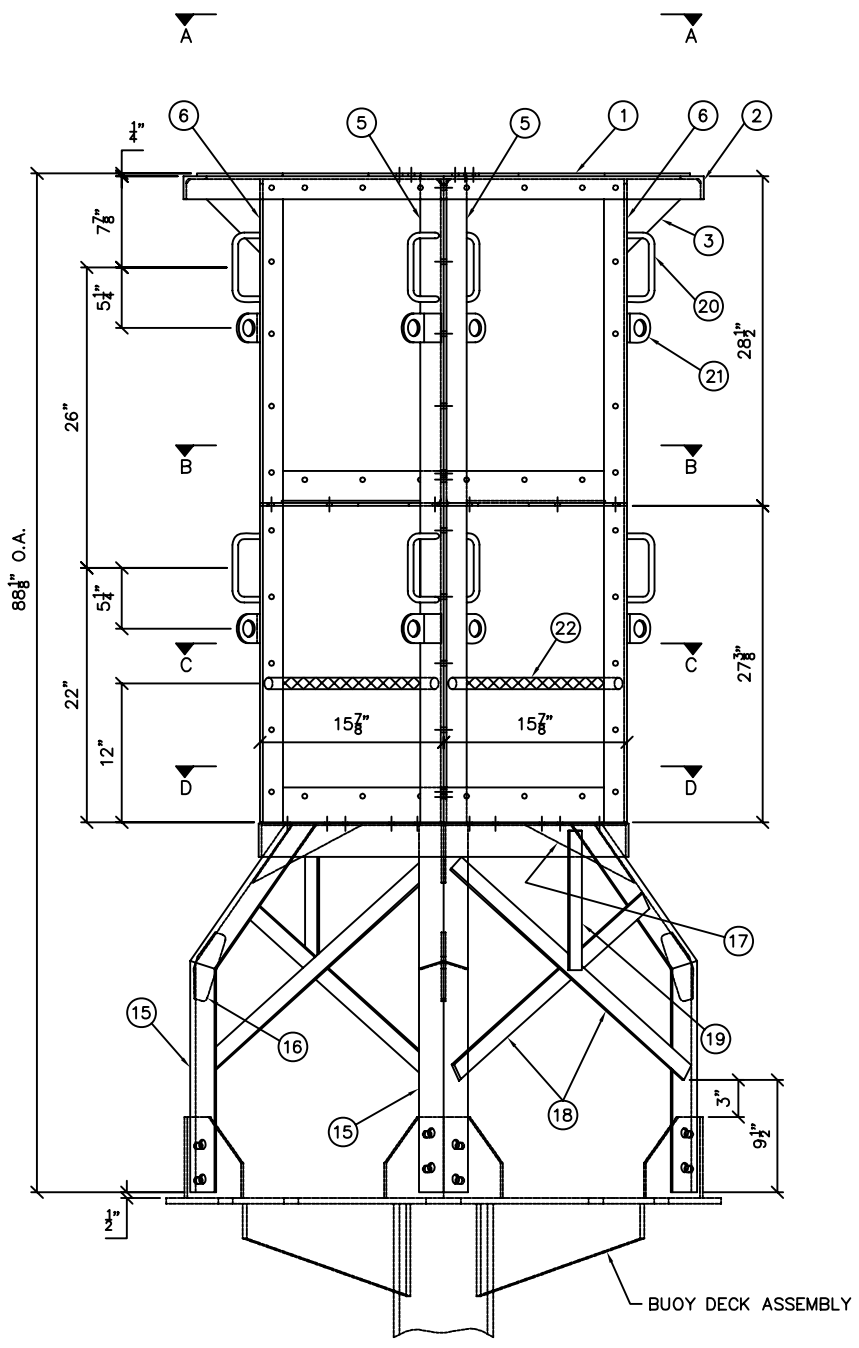

TOWER ASSEMBLY

SCALE: 1-1/2"=1'-0"

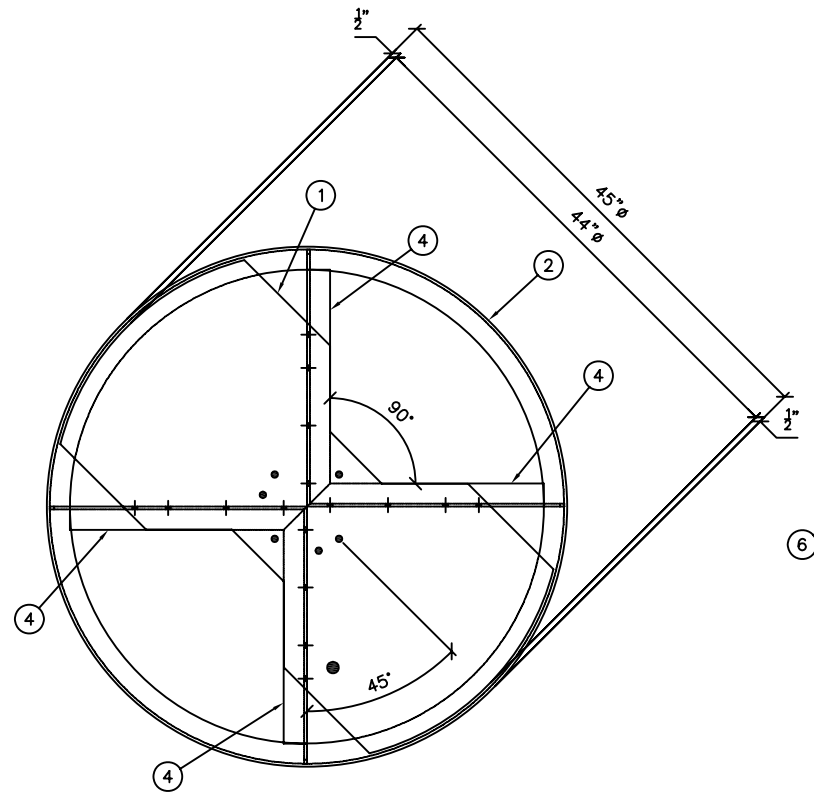

SECTION A-A

SCALE: 1-1/2"=1'-0"

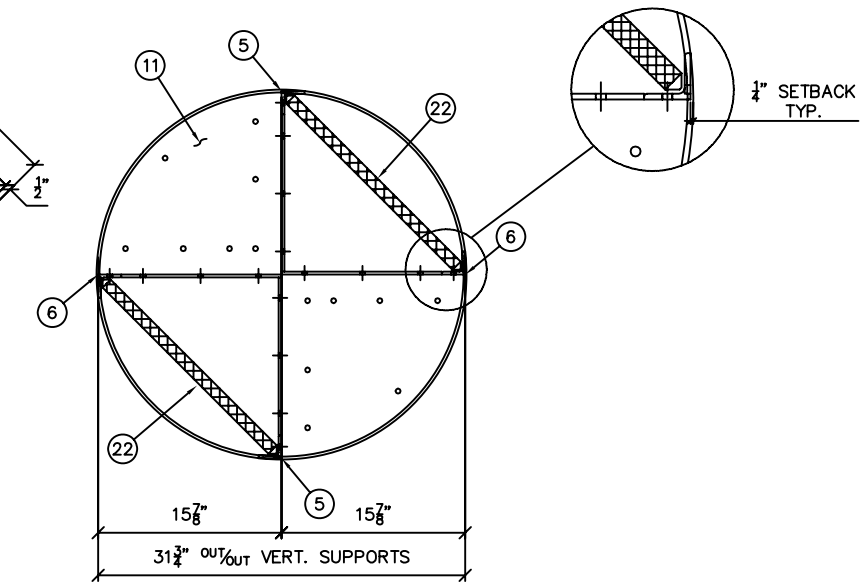

SECTION C-C

SCALE: 1-1/2"=1'-0"

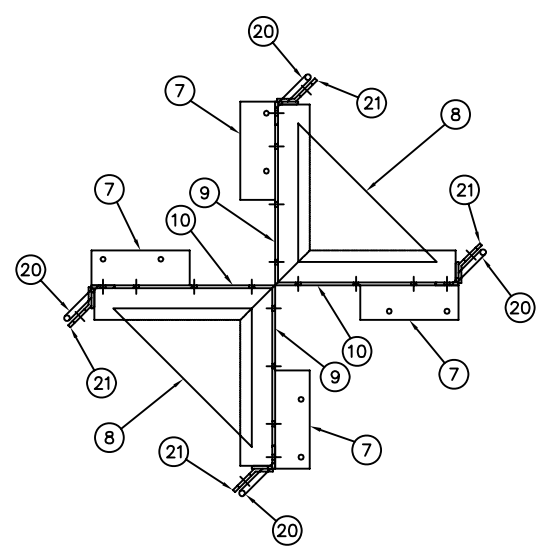

SECTION B-B

SCALE: 1-1/2"=1'-0"

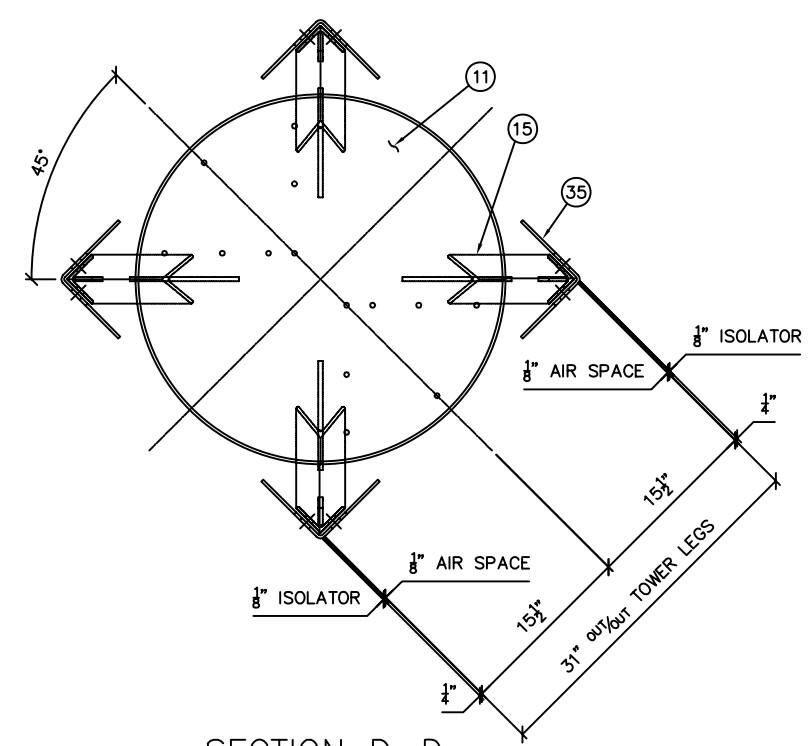

SECTION D-D

SCALE: 1-1/2"=1'-0"

REV.	DATE	APPR.	DESCRIPTION	BY

DESIGNED:
DRAWN: S.M.
TRACED:
CHECKED:
REVIEWED BY: Sean McEvoy, PROJECT ENGINEER
REVIEWED BY: Dianna Bo, CG-432B
REVIEWED BY: S.D. Walker, CG-432

U.S. COAST GUARD HEADQUARTERS
OCEAN ENGINEERING

2007 TYPE
6x16 LFR BUOY

APPROVED: S.D. Walker, acting, CHIEF, OFFICE OF CIVIL ENGINEERING
DATE: 12/11/07

UNLESS OTHERWISE SPECIFIED:
ALL DIMENSIONS ARE IN INCHES.
TOLERANCES: DIM. ±1/32
ANG. ±1°

DRAWING NUMBER: 121184
REV.
SCALE: AS NOTED
SHEET 2 OF 10

PLOTTING SCALE: 1-1/2"=1'-0"

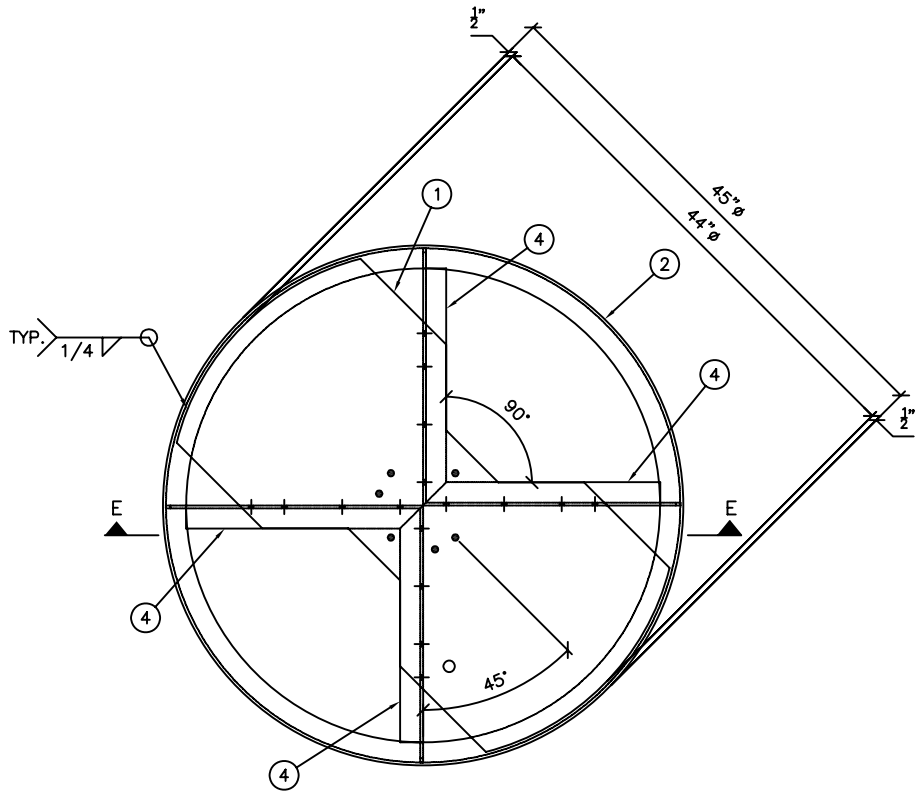

SECTION A–A

SCALE: 1–1/2"=1'–0"

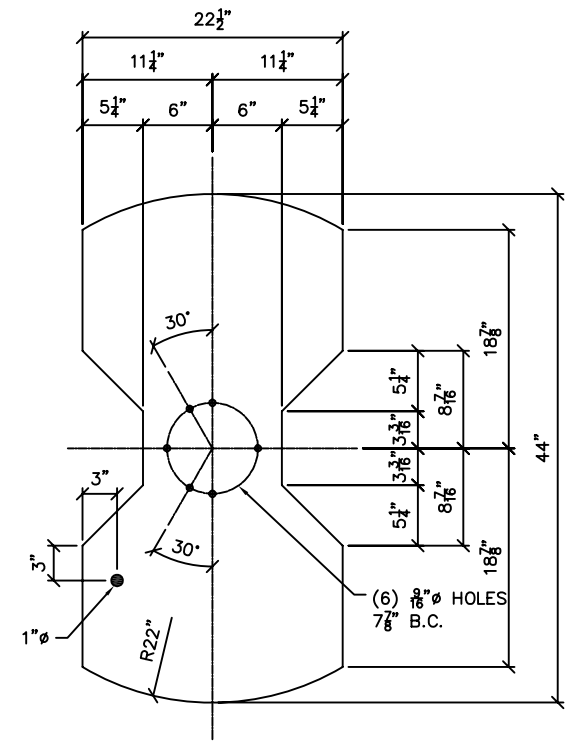

1 TOP PLATE

SCALE: 1–1/2"=1'–0"

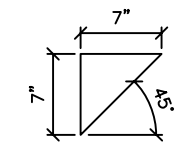

3 TOP GUSSET

SCALE: 1–1/2"=1'–0"

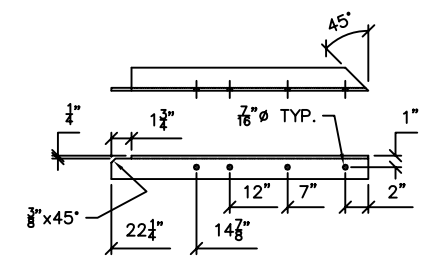

4 RIGHT TOP SUPPORT

SCALE: 1–1/2"=1'–0"

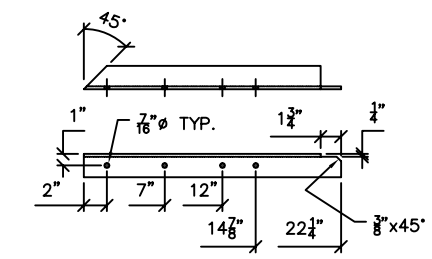

4 LEFT TOP SUPPORT

SCALE: 1–1/2"=1'–0"

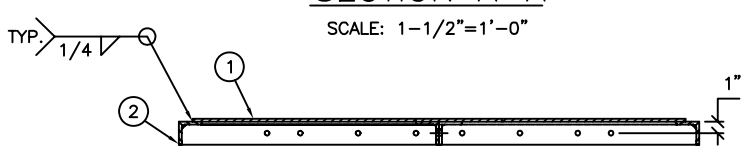

SECTION E–E

SCALE: 1–1/2"=1'–0"

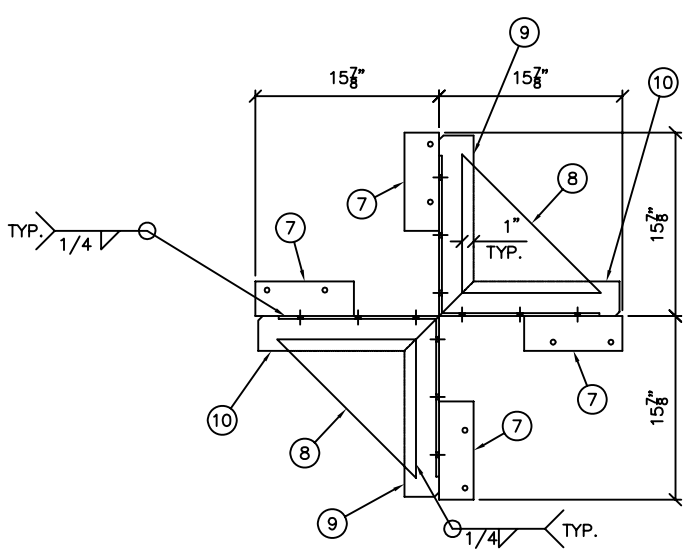

TOWER MIDDLE ASSEMBLY

SCALE: 1–1/2"=1'–0"

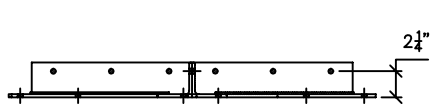

ELEVATION

SCALE: 1–1/2"=1'–0"

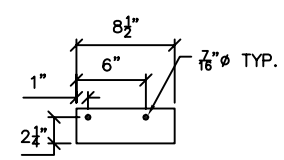

7 MIDDLE PLATE

SCALE: 1–1/2"=1'–0"

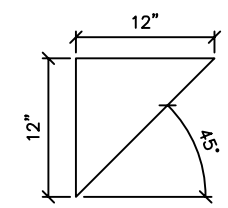

8 MIDDLE GUSSET

SCALE: 1–1/2"=1'–0"

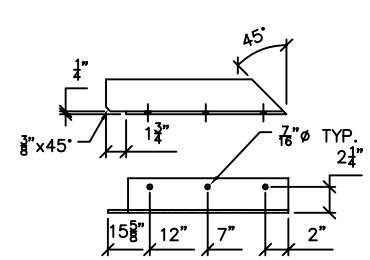

9 LH MIDDLE SUPPORT

SCALE: 1–1/2"=1'–0"

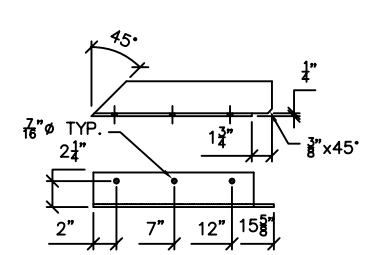

10 RIGHT MIDDLE SUPPORT

SCALE: 1–1/2"=1'–0"

REV.	DATE	APPR.	DESCRIPTION	BY

DESIGNED:
DRAWN: S.M.
TRACED:
CHECKED:
REVIEWED BY: Sean McEvoy, PROJECT ENGINEER
REVIEWED BY: Dianna Bo, CG–432B
REVIEWED BY: S.D. Walker, CG–432

U.S. COAST GUARD — HEADQUARTERS

OCEAN ENGINEERING

2007 TYPE
6x16 LFR BUOY

APPROVED: S.D. Walker, acting
CHIEF, OFFICE OF CIVIL ENGINEERING

DATE: 12/11/07

UNLESS OTHERWISE SPECIFIED:
ALL DIMENSIONS ARE IN INCHES.
TOLERANCES: DIM. ±1/32
ANG. ±1°

DRAWING NUMBER: 121184 — REV.

SCALE: AS NOTED — SHEET 3 OF 10

PLOTTING SCALE: 1–1/2"=1'–0"

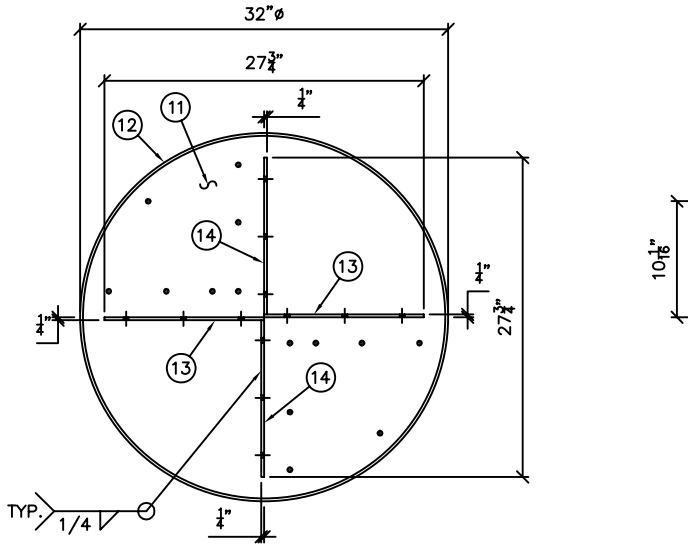

BOTTOM PLATE ASSEMBLY
SCALE: 1-1/2"=1'-0"

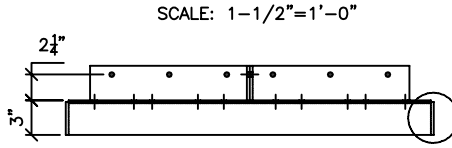

ELEVATION
SCALE: 1-1/2"=1'-0"

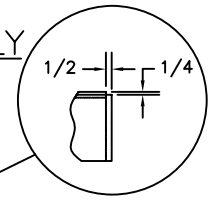

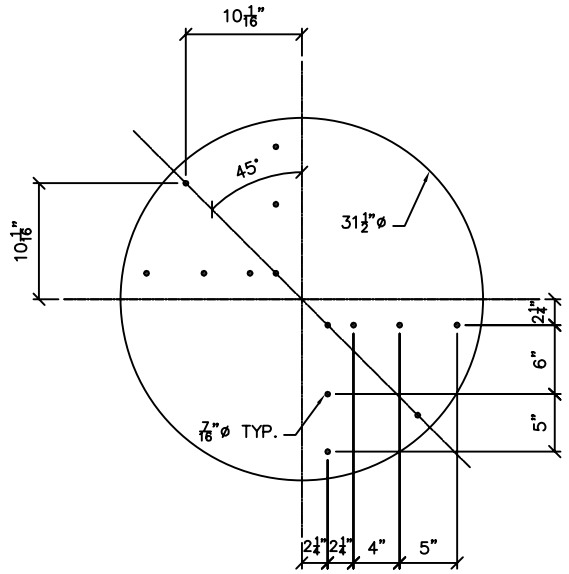

11 BOTTOM PLATE
SCALE: 1-1/2"=1'-0"

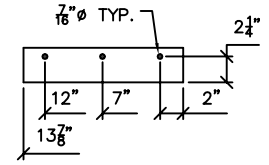

13 LH HOR SUPPORT
SCALE: 1-1/2"=1'-0"

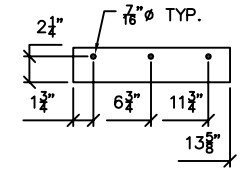

14 RH HOR SUPPORT
SCALE: 1-1/2"=1'-0"

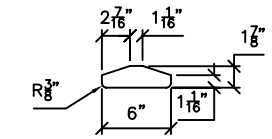

16 LEG GUSSET
SCALE: 1-1/2"=1'-0"

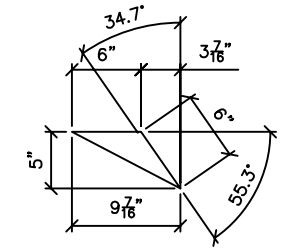

17 BOTTOM GUSSET
SCALE: 1-1/2"=1'-0"

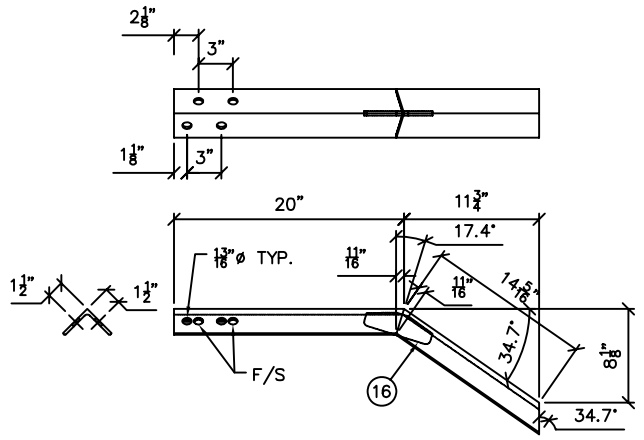

15 TOWER LEG
SCALE: 1-1/2"=1'-0"

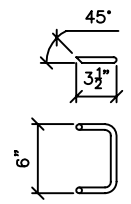

20 HANDLE
SCALE: 1-1/2"=1'-0"

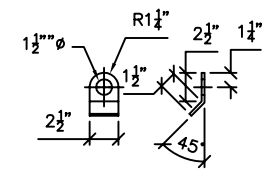

21 CLEVIS
SCALE: 1-1/2"=1'-0"

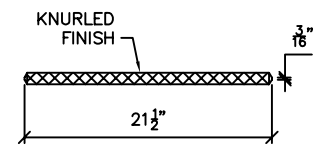

22 LADDER RUNG
SCALE: 1-1/2"=1'-0"

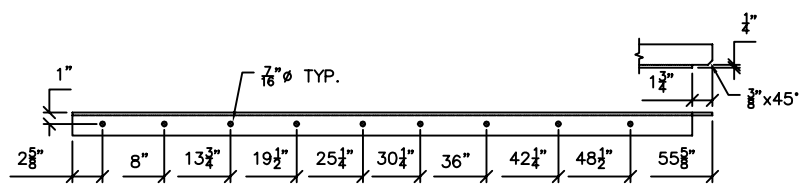

5 LEFT VERT SUPPORT
SCALE: 1-1/2"=1'-0"

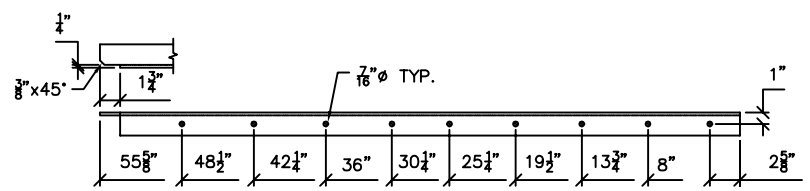

6 RIGHT VERT SUPPORT
SCALE: 1-1/2"=1'-0"

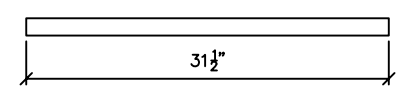

18 X-BRACE
SCALE: 1-1/2"=1'-0"

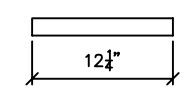

19 LEG BRACE
SCALE: 1-1/2"=1'-0"

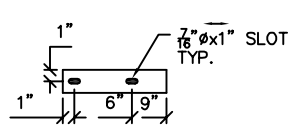

23 WASHER PLATE
SCALE: 1-1/2"=1'-0"

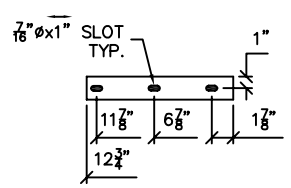

24 WASHER PLATE
SCALE: 1-1/2"=1'-0"

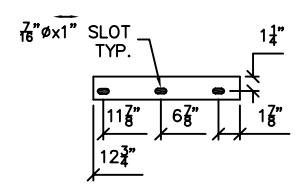

25 WASHER PLATE
SCALE: 1-1/2"=1'-0"

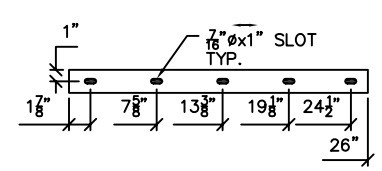

26 WASHER PLATE
SCALE: 1-1/2"=1'-0"

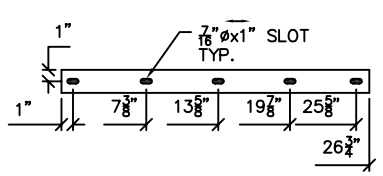

27 WASHER PLATE
SCALE: 1-1/2"=1'-0"

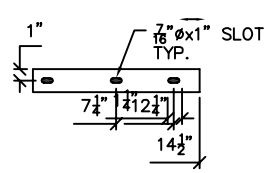

28 WASHER PLATE
SCALE: 1-1/2"=1'-0"

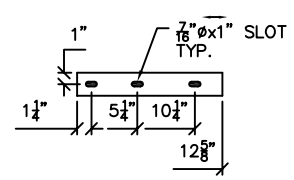

29 WASHER PLATE
SCALE: 1-1/2"=1'-0"

REV.	DATE	APPR.	DESCRIPTION	BY

DESIGNED:
DRAWN: S.M.
TRACED:
CHECKED:
REVIEWED BY: Sean McEvoy, PROJECT ENGINEER
REVIEWED BY: Dianna Bo, CG-432B
REVIEWED BY: S.D. Walker, CG-432

U.S. COAST GUARD — HEADQUARTERS
OCEAN ENGINEERING

2007 TYPE
6x16 LFR BUOY

APPROVED: S.D. Walker, acting
CHIEF, OFFICE OF CIVIL ENGINEERING
DATE: 12/11/07

UNLESS OTHERWISE SPECIFIED:
ALL DIMENSIONS ARE IN INCHES.
TOLERANCES: DIM. ±1/32
ANG. ±1°

DRAWING NUMBER: 121184
REV.
SCALE: AS NOTED
SHEET 4 OF 10

PLOTTING SCALE: 1-1/2"=1'-0"

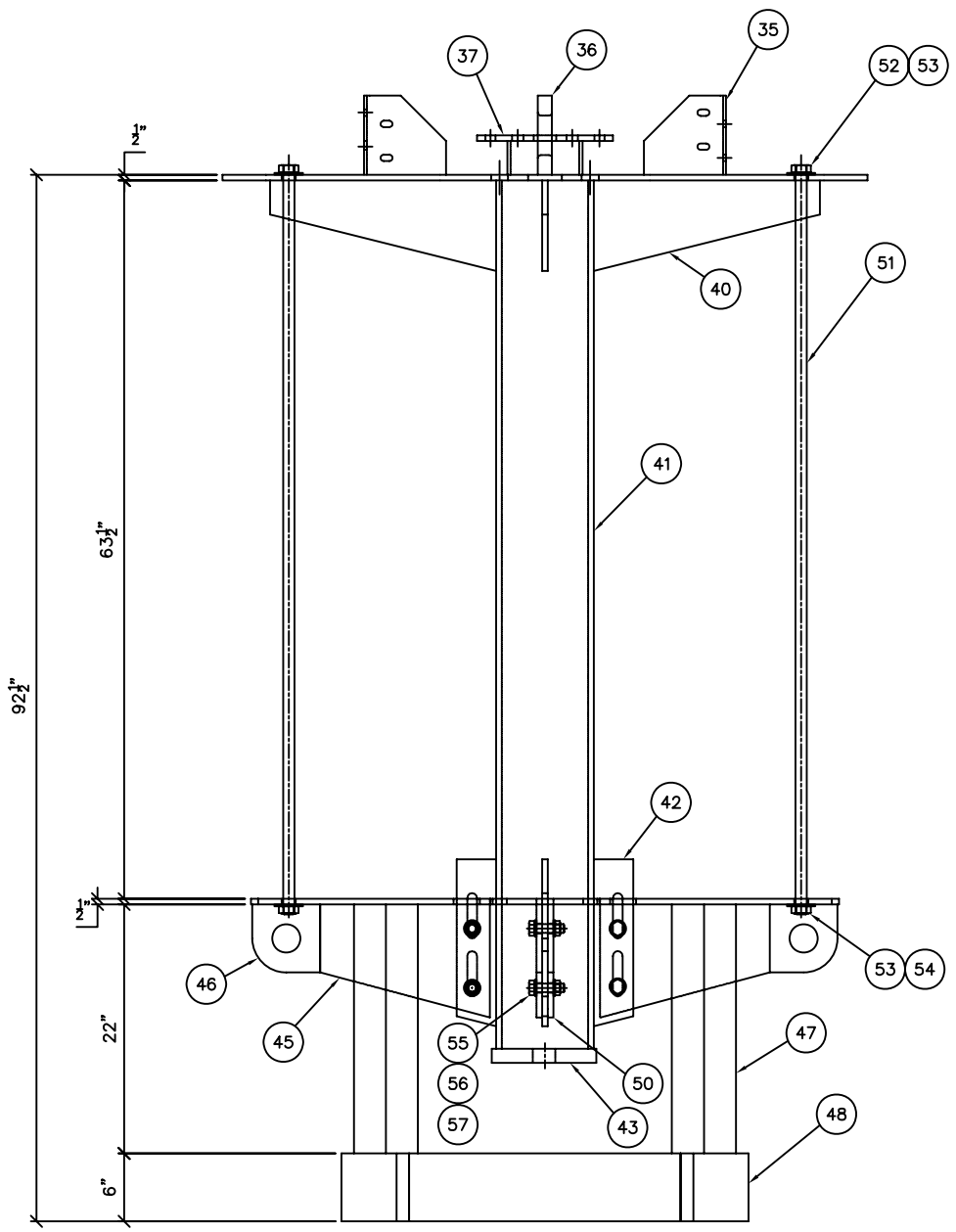

BUOY BASE ASSEMBLY

SCALE: 1-1/2"=1'-0"

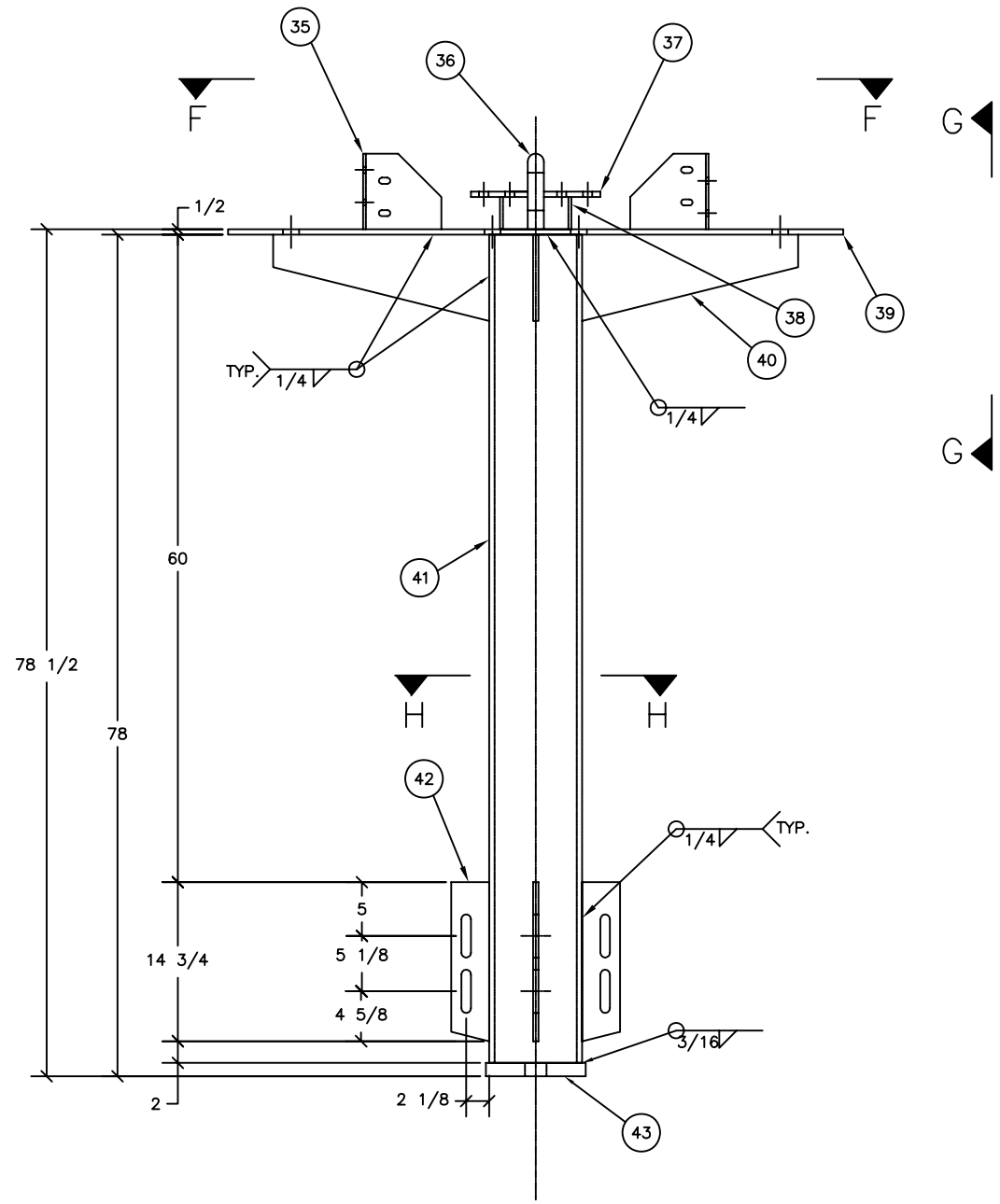

CENTER PIPE ASSEMBLY

SCALE: 1-1/2"=1'-0"

REV.	DATE	APPR.	DESCRIPTION	BY

DESIGNED:
DRAWN: S.M.
TRACED:
CHECKED:
REVIEWED BY: Sean McEvoy, PROJECT ENGINEER
REVIEWED BY: Dianna Bo, CG-432B
REVIEWED BY: S.D. Walker, CG-432

U.S. COAST GUARD HEADQUARTERS
OCEAN ENGINEERING

2007 TYPE
6x16 LFR BUOY

APPROVED: S.D. Walker, acting
CHIEF, OFFICE OF CIVIL ENGINEERING
DATE 12/11/07

UNLESS OTHERWISE SPECIFIED:
ALL DIMENSIONS ARE IN INCHES.
TOLERANCES: DIM. ±1/32
ANG. ±1°

DRAWING NUMBER 121184 REV.
SCALE: AS NOTED SHEET 5 OF 10

PLOTTING SCALE: 1-1/2"=1'-0"

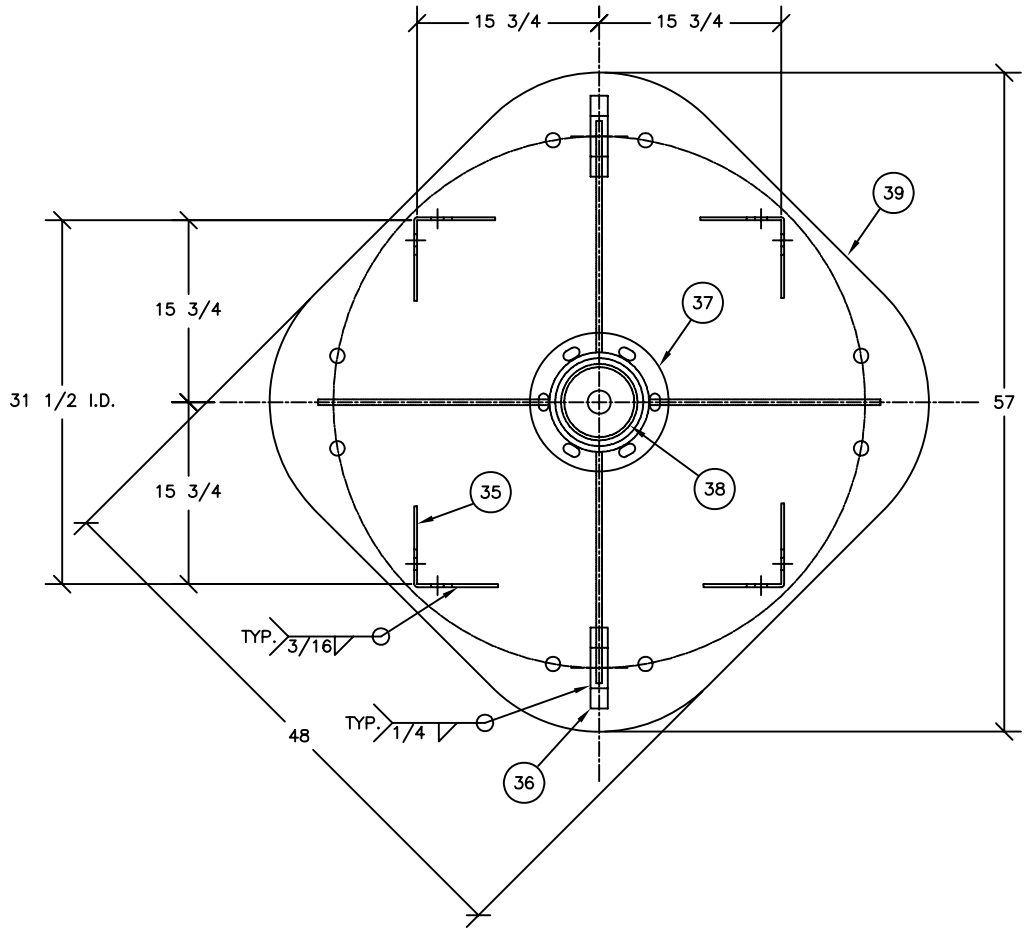

SECTION F–F

SCALE: 1–1/2"=1'–0"

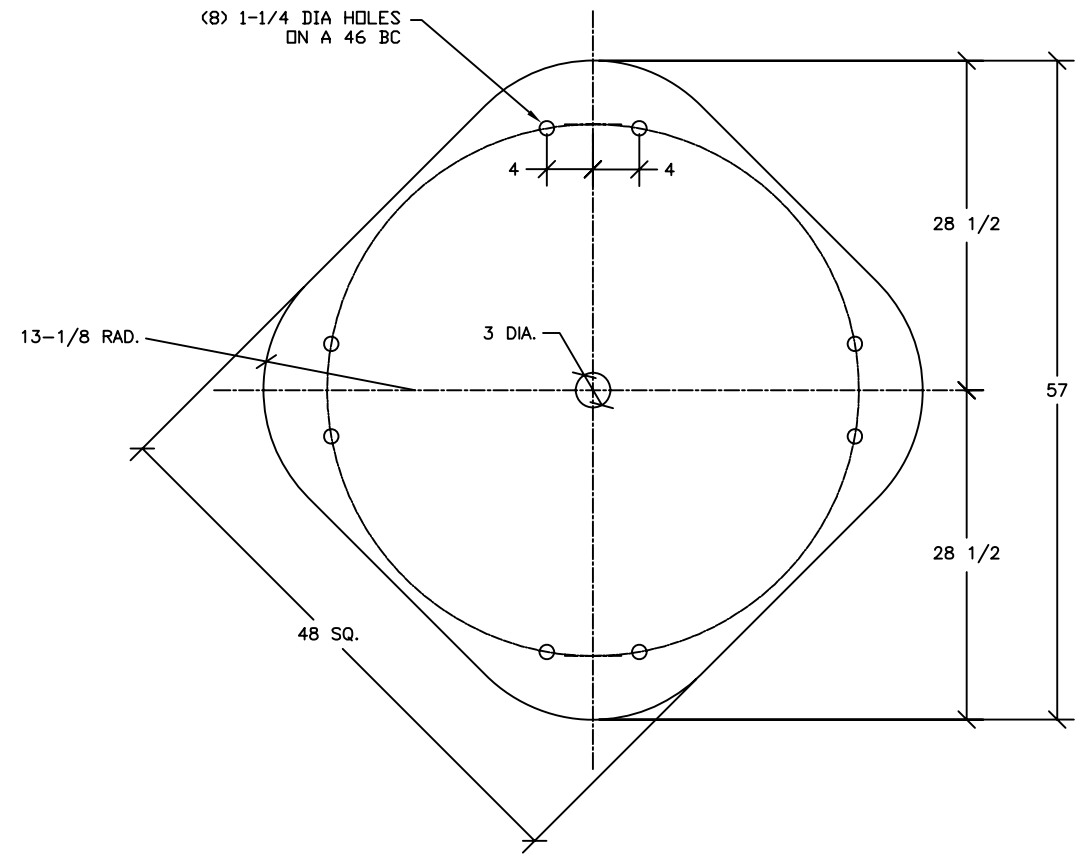

39 DECK PLATE

SCALE: 1–1/2"=1'–0"

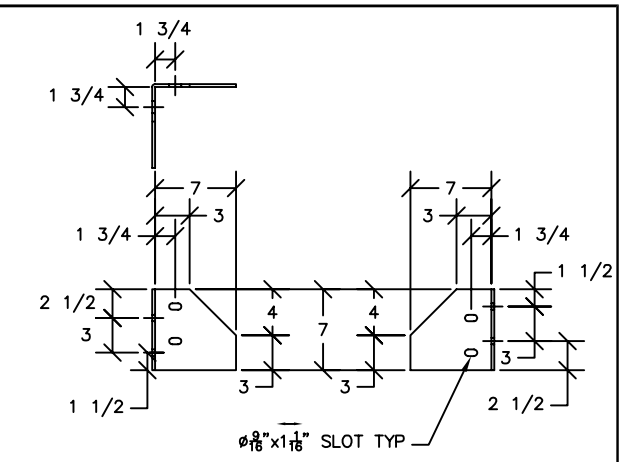

35 TOWER FOOT

SCALE: 1–1/2"=1'–0"

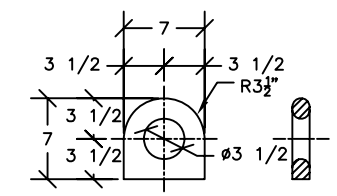

36 LIFTING BAIL

SCALE: 1–1/2"=1'–0"

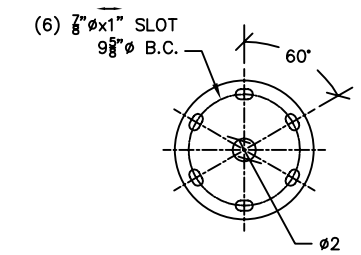

37 MOUNTING FLANGE

SCALE: 1–1/2"=1'–0"

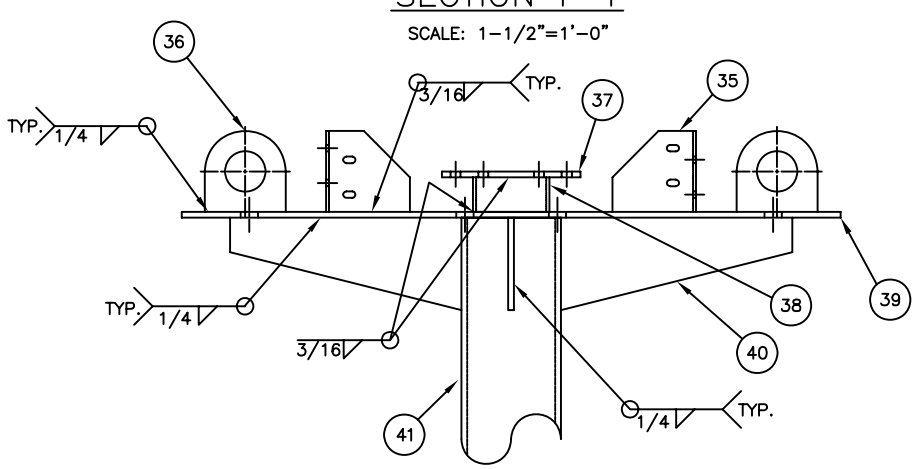

SECTION G–G

SCALE: 1–1/2"=1'–0"

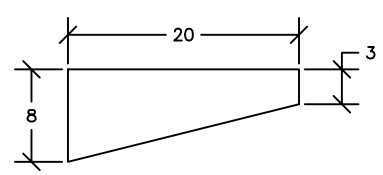

40 DECK PLATE GUSSET

SCALE: 1–1/2"=1'–0"

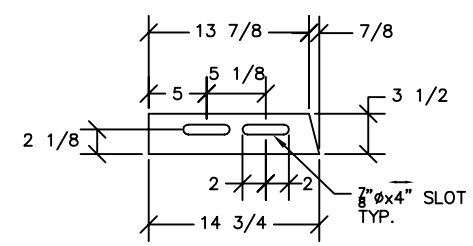

42 CENTER PIPE TAB

SCALE: 1–1/2"=1'–0"

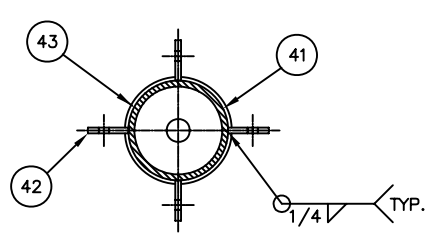

SECTION H–H

SCALE: 1–1/2"=1'–0"

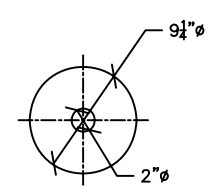

43 CENTER PIPE PLATE

SCALE: 1–1/2"=1'–0"

REV.	DATE	APPR.	DESCRIPTION	BY

DESIGNED:
DRAWN: S.M.
TRACED:
CHECKED:
REVIEWED BY: Sean McEvoy, PROJECT ENGINEER
REVIEWED BY: Dianna Bo, CG-432B
REVIEWED BY: S.D. Walker, CG-432

U.S. COAST GUARD — HEADQUARTERS
OCEAN ENGINEERING

2007 TYPE
6x16 LFR BUOY

APPROVED: S.D. Walker, acting — CHIEF, OFFICE OF CIVIL ENGINEERING
DATE: 12/11/07

UNLESS OTHERWISE SPECIFIED:
ALL DIMENSIONS ARE IN INCHES.
TOLERANCES: DIM. ±1/32
ANG. ±1°

DRAWING NUMBER: 121184
REV.
SCALE: AS NOTED
SHEET 6 OF 10

PLOTTING SCALE: 1–1/2"=1'–0"

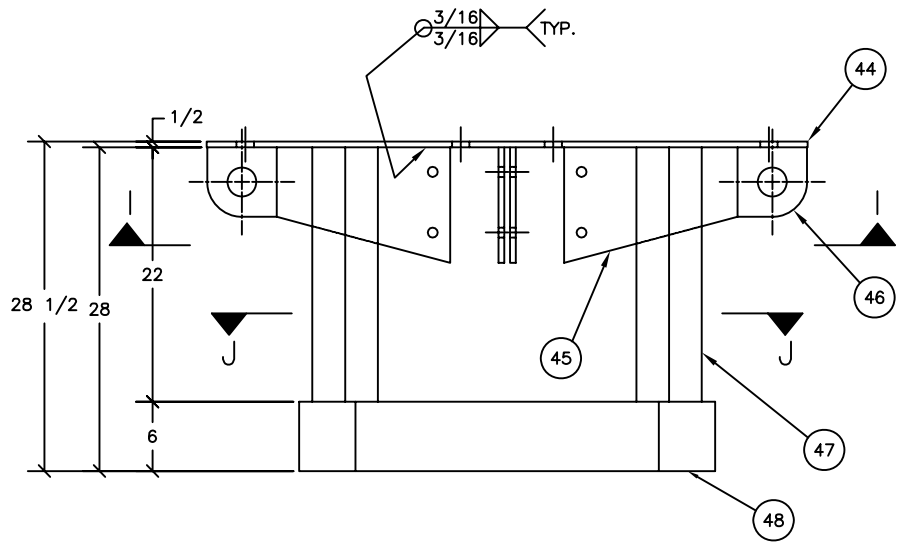

BALLAST ASSEMBLY

SCALE: 1-1/2"=1'-0"

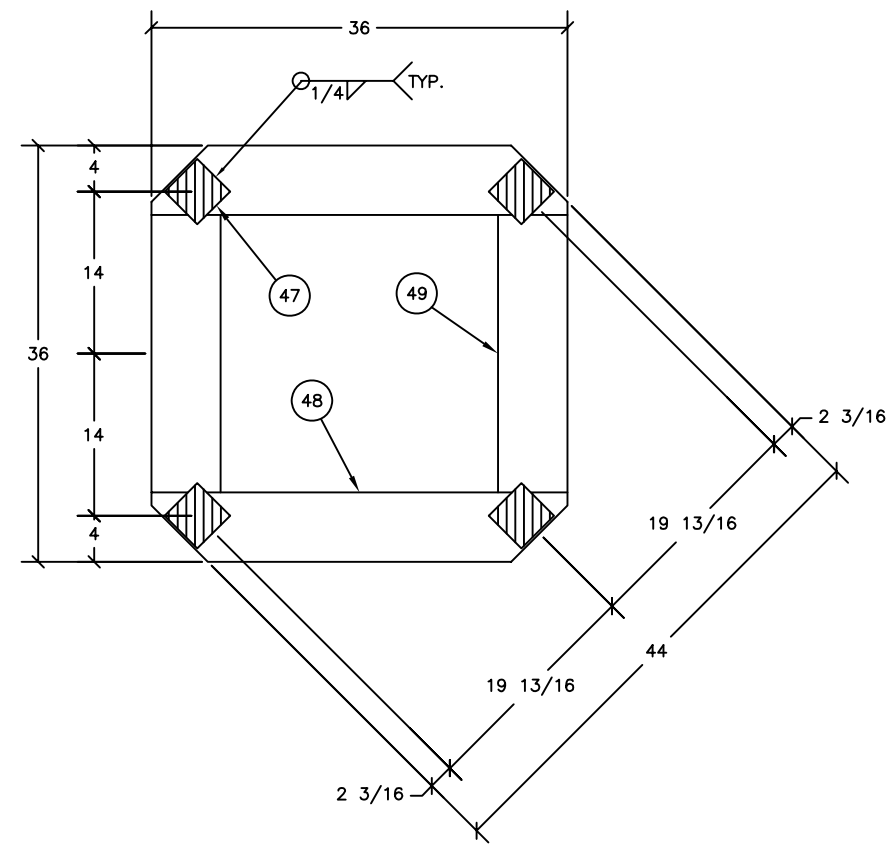

SECTION J-J

SCALE: 1-1/2"=1'-0"

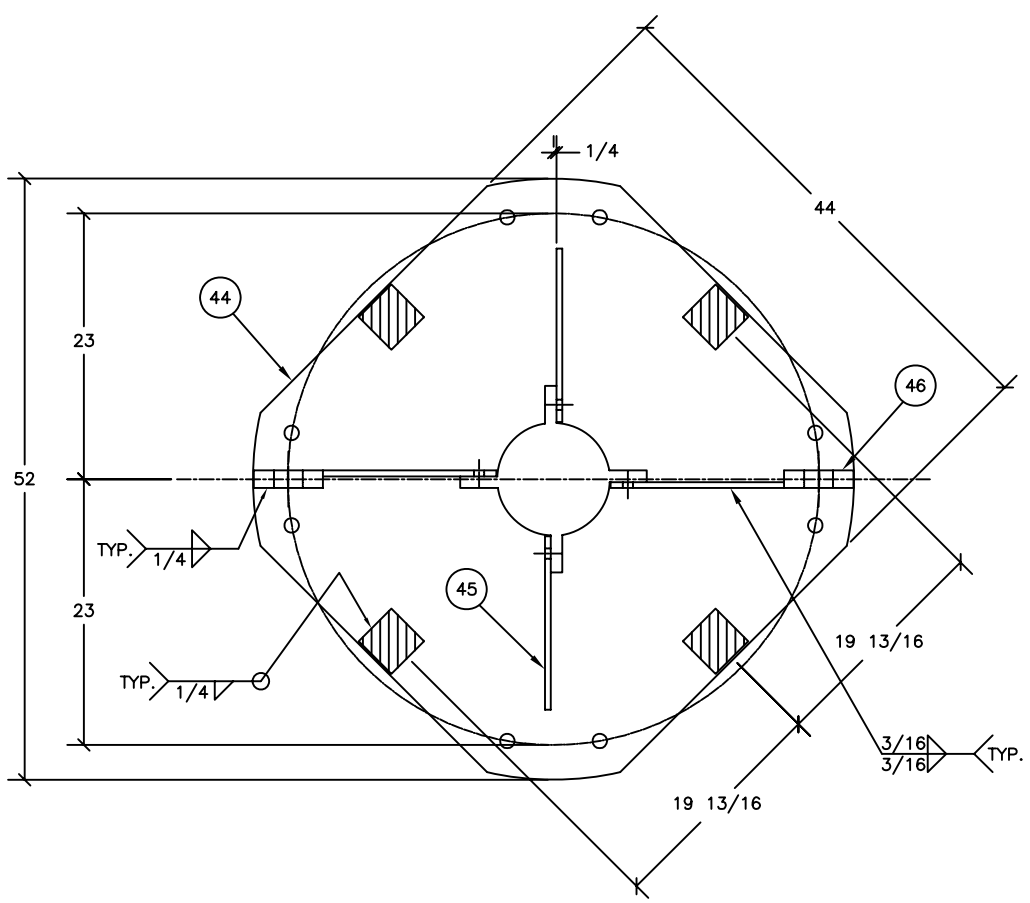

SECTION I-I

SCALE: 1-1/2"=1'-0"

REV.	DATE	APPR.	DESCRIPTION	BY

DESIGNED:
DRAWN: S.M.
TRACED:
CHECKED:
REVIEWED BY: Sean McEvoy, PROJECT ENGINEER
REVIEWED BY: Dianna Bo, CG-432B
REVIEWED BY: S.D. Walker, CG-432

U.S. COAST GUARD — HEADQUARTERS

OCEAN ENGINEERING

2007 TYPE
6x16 LFR BUOY

APPROVED: S.D. Walker, acting
CHIEF, OFFICE OF CIVIL ENGINEERING

DATE: 12/11/07

UNLESS OTHERWISE SPECIFIED:
ALL DIMENSIONS ARE IN INCHES.
TOLERANCES: DIM. ±1/32
ANG. ±1°

DRAWING NUMBER: 121184 — REV.

SCALE: AS NOTED — SHEET 7 OF 10

PLOTTING SCALE: 1-1/2"=1'-0"

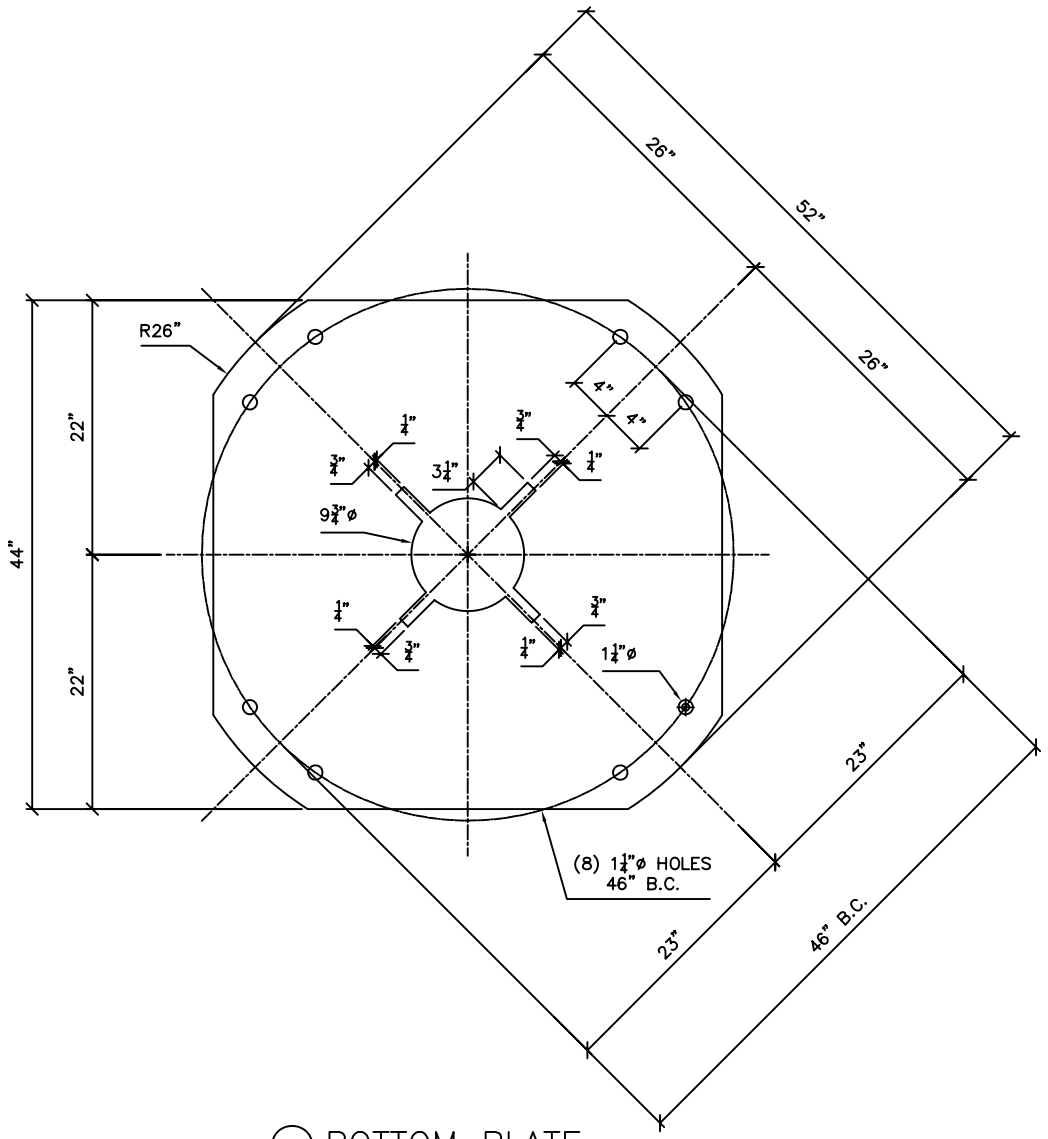

(44) BOTTOM PLATE

SCALE: 1-1/2"=1'-0"

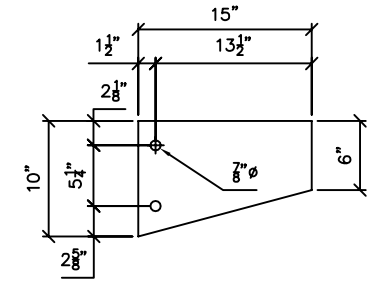

(45) BOTTOM PLATE BRACE

SCALE: 1-1/2"=1'-0"

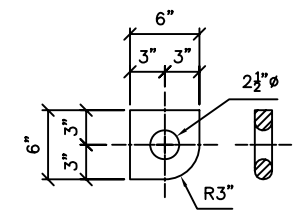

(46) MOORING BAIL

SCALE: 1-1/2"=1'-0"

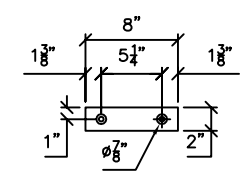

(50) WASHER PLATE

SCALE: 1-1/2"=1'-0"

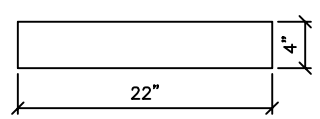

(47) BALLAST LEG

SCALE: 1-1/2"=1'-0"

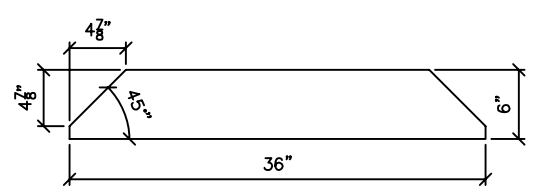

(47) BALLAST BASE

SCALE: 1-1/2"=1'-0"

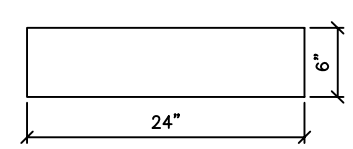

(47) BALLAST BASE

SCALE: 1-1/2"=1'-0"

REV.	DATE	APPR.	DESCRIPTION	BY

DESIGNED:
DRAWN: S.M.
TRACED:
CHECKED:
REVIEWED BY: Sean McEvoy, PROJECT ENGINEER
REVIEWED BY: Dianna Bo, CG-432B
REVIEWED BY: S.D. Walker, CG-432

U.S. COAST GUARD HEADQUARTERS
CIVIL ENGINEERING

2007 TYPE
6x16 LFR BUOY

APPROVED: S.D. Walker, acting
CHIEF, OFFICE OF CIVIL ENGINEERING
DATE 12/11/07

UNLESS OTHERWISE SPECIFIED:
ALL DIMENSIONS ARE IN INCHES.
TOLERANCES: DIM. ±1/32
ANG. ±1°

DRAWING NUMBER 121184 REV.
SCALE: NONE SHEET 8 OF 10

PLOTTING SCALE: 1-1/2"=1'-0"

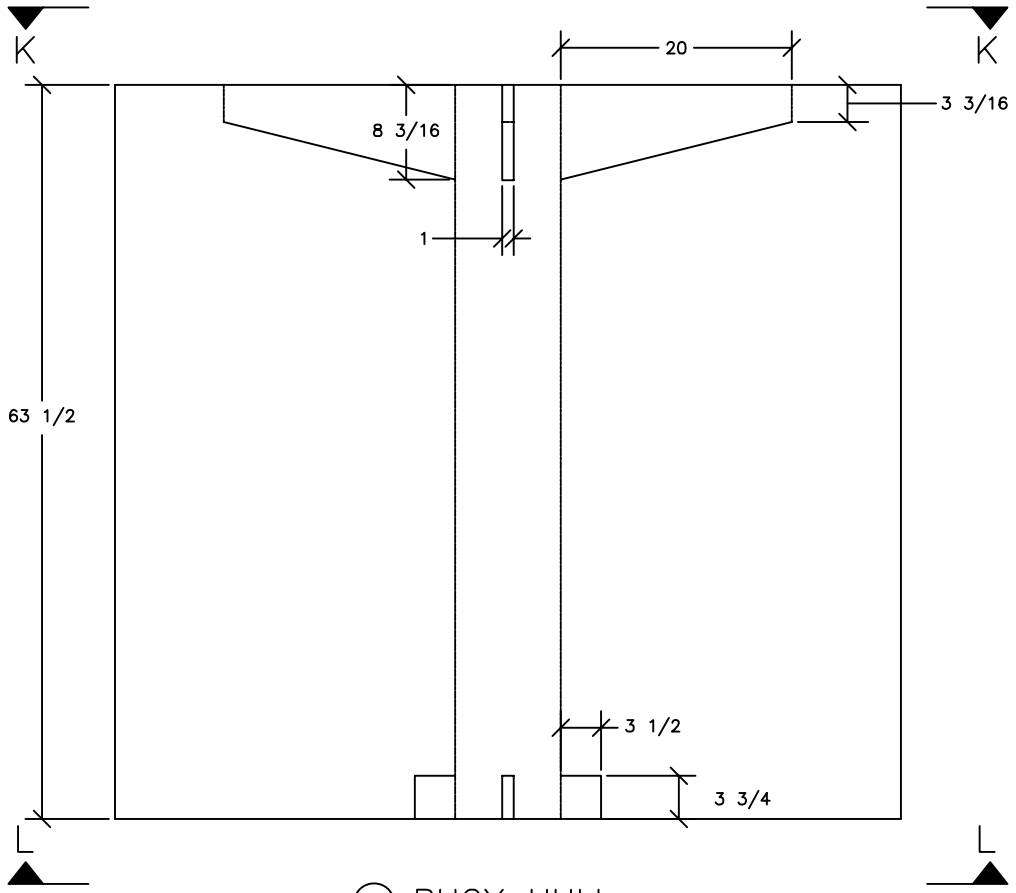

(58) BUOY HULL
SCALE: 1–1/2"=1'–0"

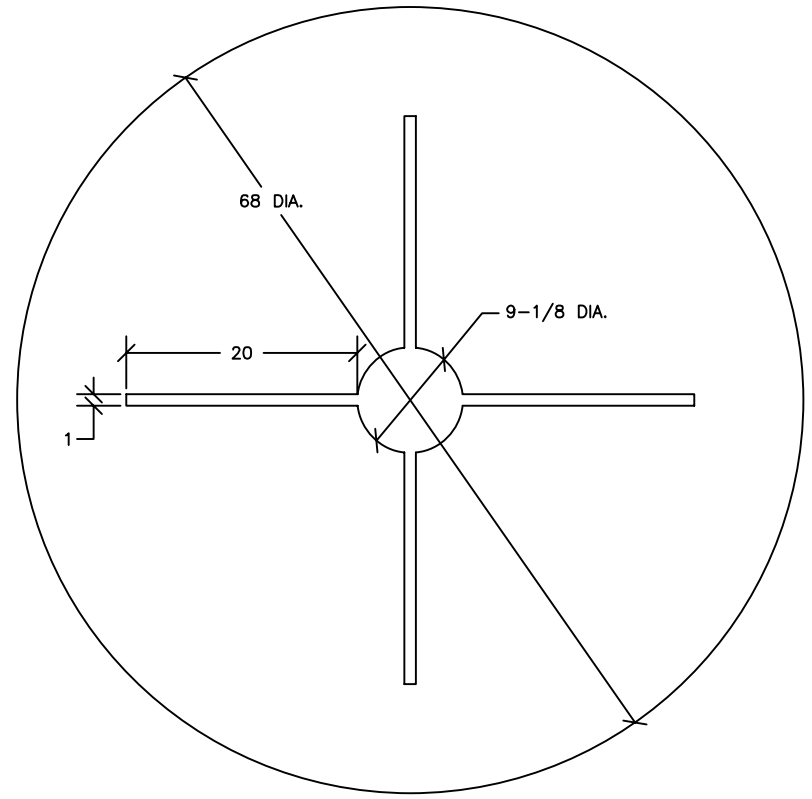

SECTION K–K
SCALE: 1–1/2"=1'–0"

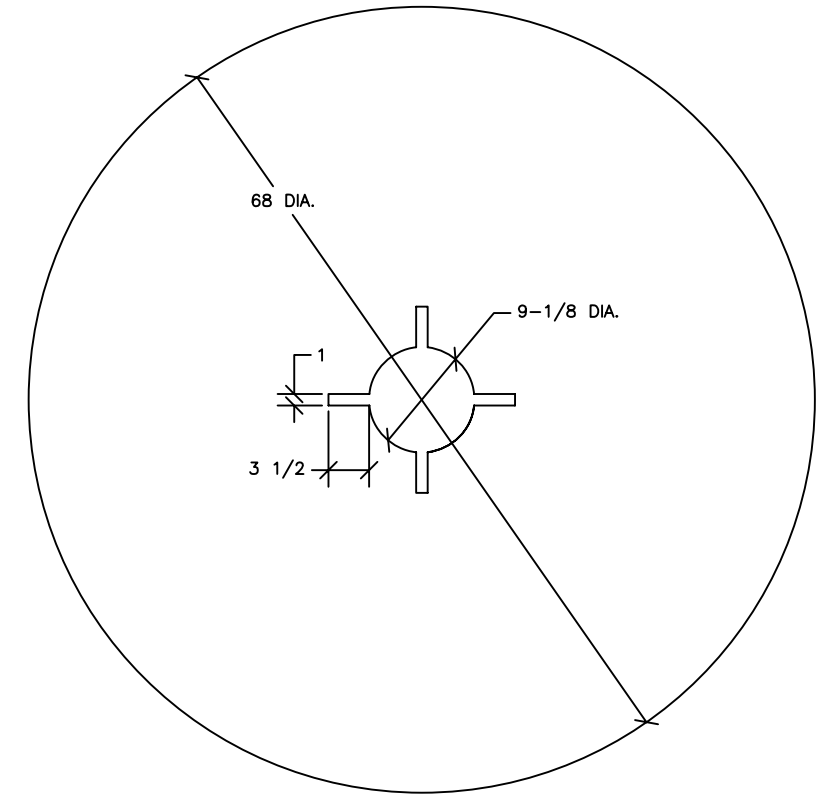

SECTION L–L
SCALE: 1–1/2"=1'–0"

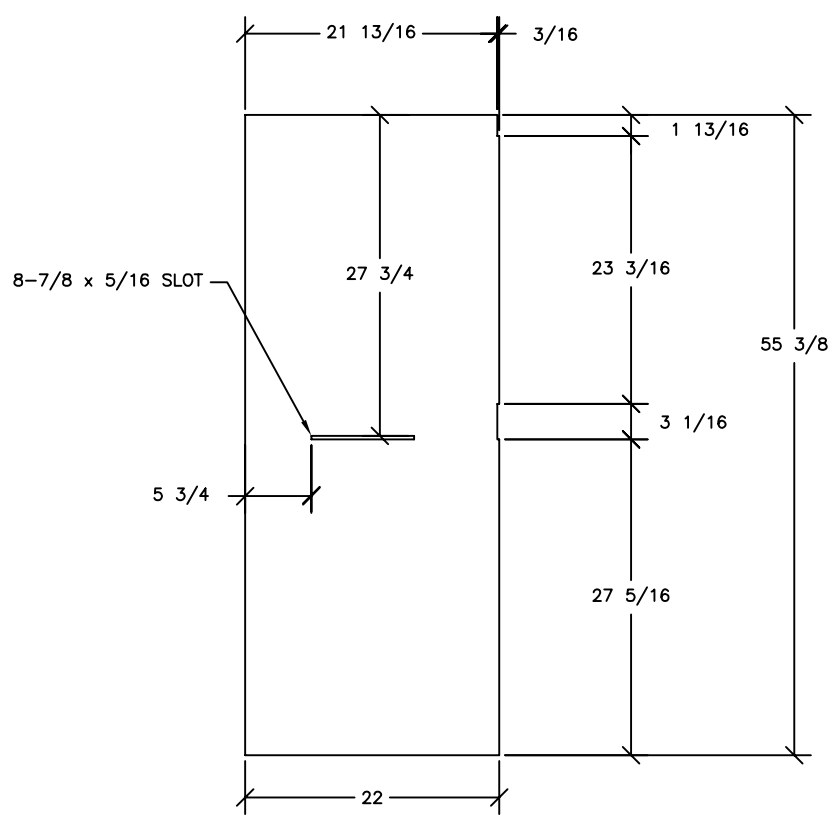

(59) RIGHT RADAR PANEL
SCALE: 1–1/2"=1'–0"

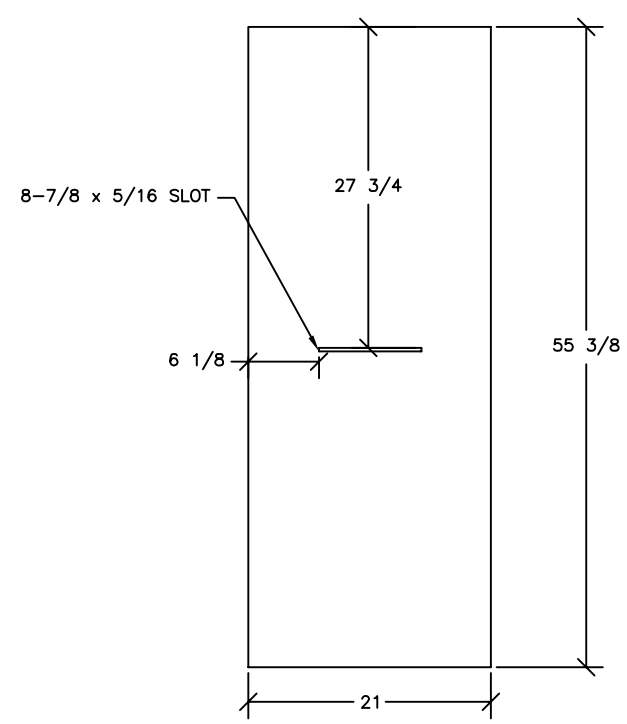

(60) LEFT RADAR PANEL
SCALE: 1–1/2"=1'–0"

REV.	DATE	APPR.	DESCRIPTION	BY

DESIGNED:
DRAWN: S.M.
TRACED:
CHECKED:
REVIEWED BY: Sean McEvoy, PROJECT ENGINEER
REVIEWED BY: Dianna Bo, CG–432B
REVIEWED BY: S.D. Walker, CG–432

U.S. COAST GUARD HEADQUARTERS
OCEAN ENGINEERING
2007 TYPE
6x16 LFR BUOY

APPROVED: S.D. Walker, acting
CHIEF, OFFICE OF CIVIL ENGINEERING
DATE 12/11/07

UNLESS OTHERWISE SPECIFIED:
ALL DIMENSIONS ARE IN INCHES.
TOLERANCES: DIM. ±1/32
ANG. ±1°

DRAWING NUMBER 121184 REV.
SCALE: AS NOTED SHEET 9 OF 10

PLOTTING SCALE: 1–1/2"=1'–0"

BILL OF MATERIALS

ITEM NO.	NO. REQ.	DESCRIPTION	MATL.	REMARKS
1	1	TOP PLATE	ALUM.	44 x 22-1/2. x 1/4 THK.
2	1	UPPER RING	ALUM.	44 DIA 2 x 2 x 1/4 L
3	4	UPPER GUSSET	ALUM.	7 x 7 x 3/8 THK.
4	4	TOP SUPPORT	ALUM.	2 x 2 x 1/4 L
5	2	RIGHT UPPER POST	ALUM.	2 x 2 x 1/4 L
6	2	LEFT UPPER POST	ALUM.	2 x 2 x 1/4 L
7	4	MIDDLE PLATE	ALUM.	3 x 8-1/2 x 1/4 THK.
8	2	MIDDLE GUSSET	ALUM.	12 x 12 x 3/16 THK
9	2	LH MIDDLE HORZ SUPPORT	ALUM.	3 x 3 x 1/4 L
10	2	RH MIDDLE HORZ SUPPORT	ALUM.	3 x 3 x 1/4 L
11	1	BOTTOM PLATE	ALUM.	31-1/2 DIA. x 1/4 THK.
12	1	LOWER RING	ALUM.	32 DIA. x 2-7/8 x 1/4 THK.
13	2	LH BOTTOM HOR SUPPORT	ALUM.	13-7/8 x 3 x 1/4 THK.
14	2	RH BOTTOM HOR SUPPORT	ALUM.	13-5/8 x 3 x 1/4 THK.
15	4	TOWER LEG	ALUM.	3 x 3 x 1/4 L
16	4	LEG GUSSET	ALUMN.	6 x 1-7/8 x 3/8 THK.
17	3	BOTTOM GUSSET	ALUM.	9-7/16 x 5 x 3/8 THK.
18	4	LEG X-BRACE	ALUM.	31-1/2 x 1-1/2 x 1/4 THK.
19	2	LEG BRACE	ALUM.	12-1/4 x 1-1/2 x 1/4 THK.
20	8	TOWER HANDLE	ALUM.	1/2 DIA. ROD
21	8	CLEVIS	ALUM.	4-1/2 x 2-1/2 x 1/4 THK.
22	2	LADDER RUNG	ALUM.	1 DIA. x 24 LG
23	4	HORIZONTAL WASHER PLATE	ALUM.	9 x 2 x 1/4 THK.
24	8	MID & BOT WASHER PLATE	ALUM.	12-3/4 x 2 x 1/4 THK.
25	4	UPPER HORZ WASHER PLATE	ALUM.	12-3/4 x 2 x 1/4 THK.
26	4	BOTTOM VERT WASHER PLATE	ALUM.	26 x 2 x 1/4 THK.
27	4	TOP VERT WASHER PLATE	ALUM.	26-3/4 x 2 x 1/4 THK.
28	2	LH BOTTOM HORZ WASHER PLATE	ALUM.	14-1/2 x 2 x 1/4 THK.
29	2	RH BOTTOM HORZ WASHER PLATE	ALUM.	12-5/8 x 2 x 1/4 THK.
30	8	ISOLATOR PAD	POLY	5 x 3 x 1/8 THK.
31	16	SHOULDER WASHER	TEFLON	1/2 ID x 3/4 OD x 1 FLANGE
32	24	HEX HEAD BOLT	STAIN. STEEL	1/2 - 13UNC x 2 LONG
33	48	FLAT WASHER	STAIN. STEEL	1/2 NOM.
34	24	HEX HEAD NUT	STAIN. STEEL	1/2 - 13UNC
35	4	TOWER FOOT	STEEL	14 x 7 x 1/4 THK.
36	2	LIFTING BAIL	STEEL	7 x 7 x 1-1/4 THK
37	1	MOUNTING FLANGE	STEEL	12 DIA x 1/2 THK.
38	1	STAND SUPPORT PIPE	STEEL	6 SCH 40 PIPE x 3 LG
39	1	DECK PLATE	STEEL	48 SQ. x 1/2 THK.
40	4	DECK PLATE GUSSET	STEEL	20 x 8 x 1/2 THK.
41	1	CENTER PIPE	STEEL	8 SCH 80 PIPE x 76-3/4 LG
42	4	CENTER PIPE TAB	STEEL	14-3/4 x 3-1/2 x 1/2 THK.
43	1	CENTER PIPE PLATE	STEEL	9-1/4 DIA. x 1-1/4 THK.
44	1	BOTTOM PLATE	STEEL	44 SQ. x 1/2 THK.
45	4	BOTTOM PLATE BRACE	STEEL	15 x 10 x 1/2 THK.
46	2	MOORING BAIL	STEEL	6 x 6 x 1-1/2 THK.
47	4	BALLAST LEGS	STEEL	6 x 6 x 22 LG SOLID STEEL
48	2	BALLAST BASE	STEEL	6 x 6 x 36 LG SOLID STEEL
49	2	BALLAST BASE	STEEL	6 x 6 x 24 LG SOLID STEEL
50	4	WASHER PLATE	STEEL	8 x 2 x 3/8 THK.

BILL OF MATERIALS

ITEM NO.	NO. REQ.	DESCRIPTION	MATL.	REMARKS
51	8	THREADED RODS	STAIN. STEEL	1 - 8UNC x 66-1/4 LG.
52	8	HEAVY HEAD HEX NUT	STAIN. STEEL	1 - 8UNC
53	16	FLAT WASHER	STAIN. STEEL	1-1/16 ID x 2-1/2 OD
54	16	HEX HEAD NYLOCK NUT	STAIN. STEEL	1 - 8UNC
55	8	HEX HEAD BOLT	STAIN. STEEL	3/4 - 10UNC x 3 LG.
56	16	FLAT WASHER	STAIN. STEEL	13/16 ID x 1-1/2 OD
57	8	HEX HEAD NYLOCK NUT	STAIN. STEEL	3/4 - 10UNC
58	1	BUOY HULL	FOAM	4 PCF SEE NOTE 1
59	2	LEFT RADAR PANEL	FOAM	7/8 TO 1 THK SEE NOTE 3
60	2	RIGHT RADAR PANEL	FOAM	7/8 TO 1 THK SEE NOTE 3
61	76	HEX HEAD BOLT	STAIN. STEEL	3/8 - 13UNC x 2 LG.
62	152	FLAT WASHER	STAIN. STEEL	3/8 NOM.
63	76	HEX HEAD NYLOCK NUT	STAIN. STEEL	3/8 - 13UNC
64	1	BATTERY BOX	STEEL	SEE DRAWING 121100

NOTES:

1. SEE LATEST REVISION OF U.S.C.G. CIVIL ENGINEERING SPECIFICATION No. 450 FOR FABRICATION REQUIREMENTS. DIMENSIONAL TOLERANCES FOR ITEM 60 ARE ±1 FOR THE DIAMETER AND ±1/4 FOR THE HEIGHT.
2. TACK WELD ITEM 51 TO ITEM 52.
3. FOAM RADAR PANELS CONSIST OF AN ALUMINUM FOIL SHEET HEAT SEALED IN BETWEEN TWO FOAM PANELS. THE MOUNTING HOLES IN THE PANELS SHALL BE BACK DRILLED DURING INSTALLATION TO ENSURE PROPER ALIGNMENT.

REV.	DATE	APPR.	DESCRIPTION	BY

DESIGNED:
DRAWN: S.M.
TRACED:
CHECKED:
REVIEWED BY: Sean McEvoy, PROJECT ENGINEER
REVIEWED BY: Dianna Bo, CG-432B
REVIEWED BY: S.D. Walker, CG-432

U.S. COAST GUARD HEADQUARTERS
OCEAN ENGINEERING

2007 TYPE
6x16 LFR BUOY

APPROVED: S.D. Walker, acting
CHIEF, OFFICE OF CIVIL ENGINEERING
DATE 12/11/07

UNLESS OTHERWISE SPECIFIED:
ALL DIMENSIONS ARE IN INCHES.
TOLERANCES: DIM. ±1/32
ANG. ±1°

DRAWING NUMBER 121184
REV.
SCALE: AS NOTED
SHEET 10 OF 10

PLOTTING SCALE: 1-1/2"=1'-0"