DRAWING NO.	SHT	REV
826140CG	1	–

ZONE	REV	DESCRIPTION	DATE	APPROVED

NOTE: HOSE LENGTH REFERS TO LENGTH OF COMPLETED ASSEMBLY.

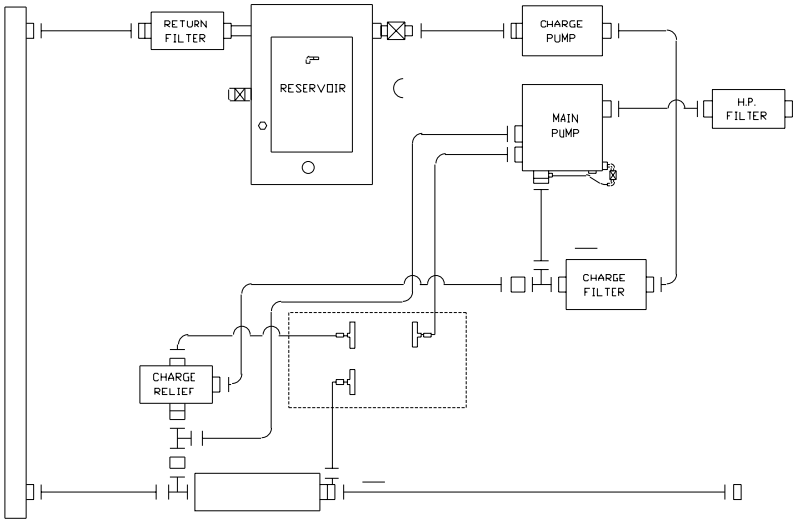

PRIMARY HYDRAULIC SYSTEM SCHEMATIC

MH012	1AA4F.J4	N/A	GH793-4	18.25	1AA4F.J4	N/A	11500
MH011	1AA4F.J4	N/A	GH793-4	19.0	1AA4F.J4	N/A	11500
MH010	1AA4F.J4	N/A	GH793-4	47.5	1AA4F.J4	N/A	11500
MH009	688-32	DL-32	FC318-32	34.0	1988-32-32	DL-32	200
MH008	688-24	DL-24	FC318-24	69.0	688-24	DL-24	300
MH007	688-20	DL-20	FC318-20	26.5	688-20	DL-20	400
MH006	1AA16F.J16	N/A	GH793-16	37.5	1AA16F.J16	N/A	3000
MH005	1AA16F.J12	N/A	GH793-12	45.75	1AA12F.J12	N/A	6250
MH004	FC5329-1616S	N/A	FC-329	23.5	FC5321-1616S	N/A	10000
MH003	1AA16F.J16	N/A	GH793-16	19.0	1AA16F.J16	N/A	3000
MH002	1824FLB24	N/A	GH493-24	29.75	1824FLB24	N/A	3000
MH001	688-20	DL-20	FC318-20	41.5	688-20	DL-20	400
HOSE NO.	"A" END FITTING	HOSE CLAMP	HOSE	LENGTH	"B" END FITTING	HOSE CLAMP	TEST PRESSURE

HPU MAIN HYDRAULIC SYSTEM HOSE LIST (AEROQUIP OR EQUAL)

39	1	5E240	6408-20-0	O.R.B. PLUG	
38	1	5E240	6402-16-16	O.R.B. SWIVEL ADAPTER	
37	1	5E240	6801-08-08-NWO	90 DEGREE POSITIONABLE ELBOW	
36	2	5E240	6408-12-0	O.R.B. PLUG	
35	1	5E240	3474-12-12-NWO	O.R.B. CONNECTOR	
34	1	5E240	5406-P04	PIPE PLUG, HEX HEAD	
33	1	5E240	6408-04-0	O.R.B. PLUG	
32	1	63383	16SFX-2	1" SPLIT FLANGE, CODE 62	
31	2	63383	24SF-2	1 1/2" SPLIT FLANGE, CODE 61	
30	1	5E240	6405-06-04-0	MALE O.R.B. CONNECTOR	
29	1	5E240	5500-04-04	90 DEGREE PIPE ELBOW, MALE	
28	2	63383	32SF-2	2" SPLIT FLANGE, CODE 61	
27	1	5E240	2502-14-14	90 DEGREE FEMALE ELBOW	
26	2	5E240	2403-14-14	STRAIGHT ADAPTER, FEMALE	
25	2	5E240	6400-32-32-0	STRAIGHT CONNECTOR	
24	1	63383	AS-32-GP	2" FLANGE SPACER	
23	1	63383	W46-16-24	1" X 1 1/2" REDUCING FLANGE	
22	1	5E240	3474-20-20-NWO	O.R.B. CONNECTOR	
21	1	5E240	6502-16-16	45 DEGREE SWIVEL ELBOW	
20	1	5E240	6814-16-16-16-NWO	RUN TEE, POSITIONABLE	
19	1	5E240	6801-16-20-NWO	90 DEGREE POSITIONABLE ELBOW	
18	1	5E240	6400-04-04-0	STRAIGHT CONNECTOR	
17	1	5E240	6801-16-16-NWO	90 DEGREE POSITIONABLE ELBOW	
16	1	63383	W48-16-16	1" FLANGE, CODE 62	
15	1	5E240	6801-04-06-NWO	90 DEGREE POSITIONABLE ELBOW	
14	1	5E240	6801-12-12-NWO	90 DEGREE POSITIONABLE ELBOW	
13	1	01876	500024-32-24	SPLIT FLANGE TO FLARE ADAPTER	
12	1	5E240	6801-24-20-NWO	90 DEGREE POSITIONABLE ELBOW	
11	1	5E240	6400-16-20-0	STRAIGHT CONNECTOR	
10	2	5E240	2501-04-04	90 DEGREE MALE ELBOW	
9	1	5E240	6430-21-16-0	O.R.B. PORT BUSHING	
8	1	5E240	6402-16-16-0	O.R.B. SWIVEL ADAPTER	
7	1	5E240	6602-16-16-16	SWIVEL TEE, RUN	
6	1	5E240	6801-20-20-NWO	90 DEGREE POSITIONABLE ELBOW	
5	1	5E240	2406-20-16	TUBE REDUCER	
4	1	5E240	6814-20-20-21-NWO	RUN TEE, POSITIONABLE	
3	1	5E240	6801-04-04-NWO	90 DEGREE POSITIONABLE ELBOW	
2	1	5E240	6802-20-20-NWO	45 DEGREE POSITIONABLE ELBOW	
1	1	5E240	6400-21-21-0	STRAIGHT CONNECTOR	

5301-A BALLARD AVENUE, PORTSMOUTH, VA 23701

.X DECIMAL ± .08	.XX DECIMAL ± .03
.XXX DECIMAL ± .010	ANGLE ± 2°

REMOVE BURRS AND BREAK SHARP EDGES .03 MAX
HOSE DRAWN R .25 MIN.
SURFACE ROUGHNESS 125
FRACTIONS ± 1/16

MATERIAL: N/A

	L MURPHY
	D OLSON
	L MURPHY
REVIEWED BY:	
APPROVED BY:	GARY VAN MOURIK
SCALE:	DATE:
CAD FILE NO.: 8140-1-00	DATE: 2-10-97

MODEL 82647CG HVPU
PRIMARY HYDRAULIC SYSTEM
SCHEMATIC

SIZE	CAGE CODE	DRAWING NO.	REV
D	0MWH0	826140CG	–
NONE		1 1	