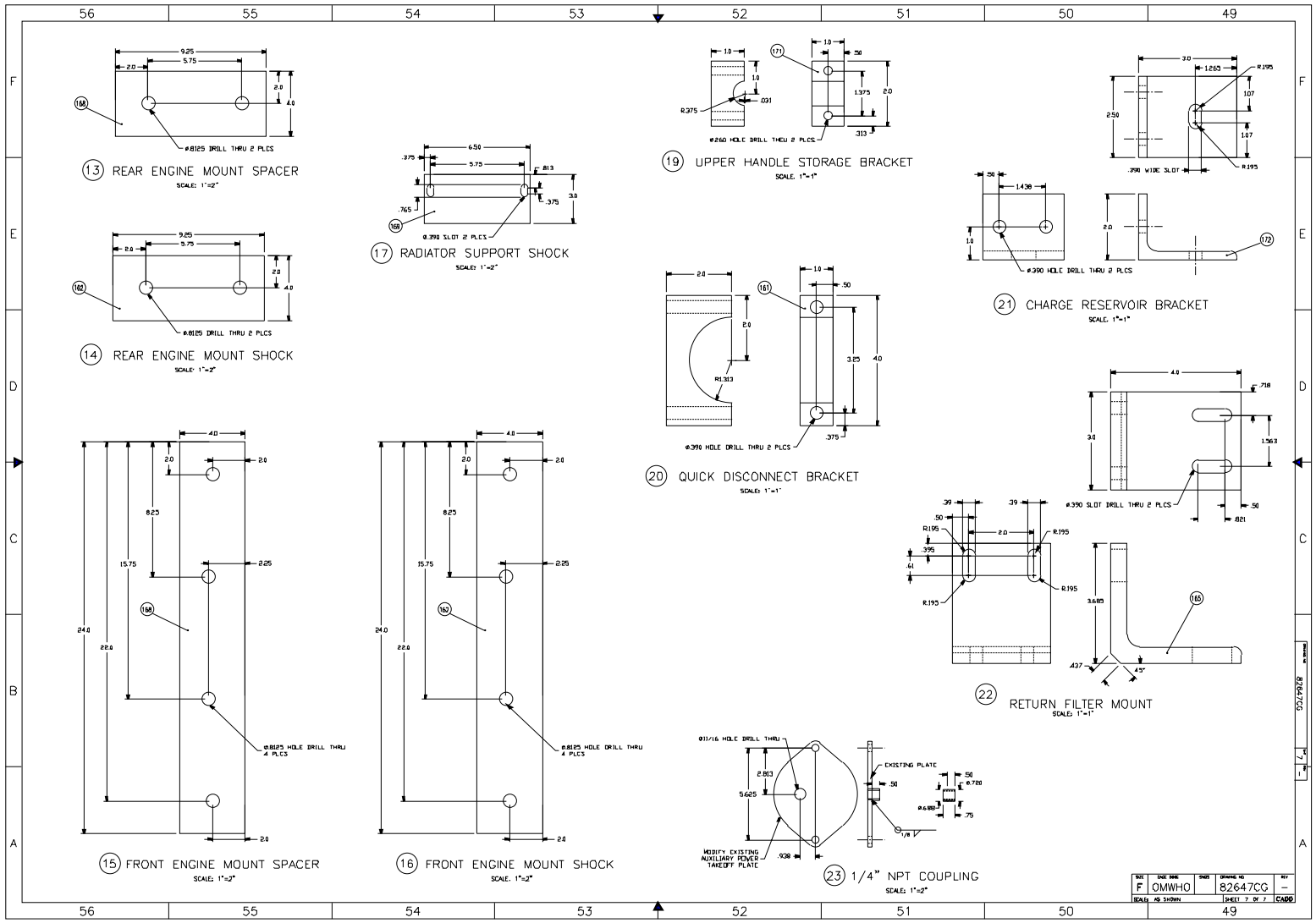
13 REAR ENGINE MOUNT SPACER
SCALE: 1"=2"
14 REAR ENGINE MOUNT SHOCK
SCALE: 1"=2"
15 FRONT ENGINE MOUNT SPACER
SCALE: 1"=2"
16 FRONT ENGINE MOUNT SHOCK
SCALE: 1"=2"
17 RADIATOR SUPPORT SHOCK
SCALE: 1"=2"
19 UPPER HANDLE STORAGE BRACKET
SCALE: 1"=1"
20 QUICK DISCONNECT BRACKET
SCALE: 1"=1"
21 CHARGE RESERVOIR BRACKET
SCALE: 1"=1"
22 RETURN FILTER MOUNT
SCALE: 1"=1"
23 1/4" NPT COUPLING
SCALE: 1"=2"
ø.8125 DRILL THRU 2 PLCS
ø.390 SLOT 2 PLCS
ø.260 HOLE DRILL THRU 2 PLCS
ø.390 HOLE DRILL THRU 2 PLCS
ø.390 WIDE SLOT
ø.390 SLOT DRILL THRU 2 PLCS
ø.8125 HOLE DRILL THRU 4 PLCS
ø11/16 HOLE DRILL THRU
EXISTING PLATE
MODIFY EXISTING AUXILIARY POWER TAKEOFF PLATE
SIZE F
CODE IDENT OMWHO
SHEET
DRAWING NO 82647CG
REV –
SCALE: AS SHOWN
SHEET 7 OF 7
CADD
82647CG