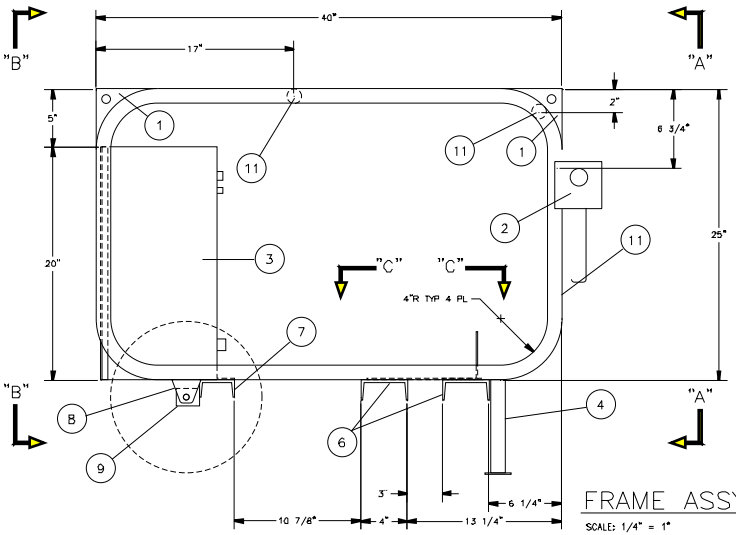

FRAME ASSY-SIDE

SCALE: 1/4" = 1"

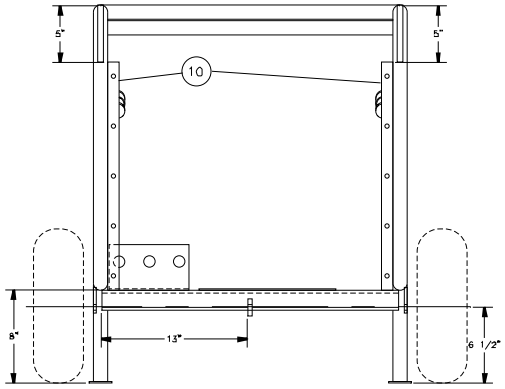

FRAME ASSY-BACK "B-B"

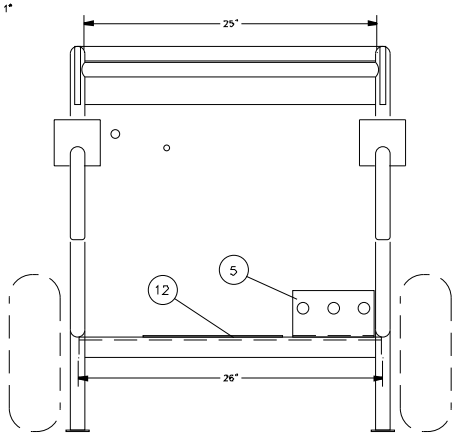

FRAME ASSY-FRONT "A-A"

SCALE: 1/4" = 1"

PARTS LIST

QTY REQD	CAGE CODE	SYM	PART OR IDENTIFYING NO	NOMENCLATURE OR DESCRIPTION	MATERIAL SPECIFICATION	ZONE	ITEM NO
2			FSP-10-1	PAD EYE 1/2"PL.	ALUM -6061-T6		1
2			FSP-10-2	HANDLE ASSEMBLY			2
1			FSP-10-3	TANK ASSEMBLY			3
2			FSP-10-4	LEG ASSEMBLY			4
1			FSP-10-5	CONNECTOR MOUNT 4"x 3"L	ALUM -6061-T6		5
2			FSP-10-6	FRAME MEMBER 4"x 1 3/4" CHANNEL	ALUM -6061-T6		6
1			FSP-10-7	FRAME MEMBER 3"x 1 1/2" CHANNEL	ALUM -6061-T6		7
2			FSP-10-8	AXLE END GUIDE 1/4"PL.	ALUM -6061-T6		8
1			FSP-10-9	AXLE CENTER GUIDE 1/4"PL.	ALUM -6061-T6		9
2			FSP-10-10	TANK MOUNTS 1"x 1/2"BAR	ALUM -6061-T6		10
2			FSP-10-11	FRAMING TUBE 1 1/4"O.D.	ALUM -6061-T6		11
1			FSP-10-12	ENGINE MOUNT BASE 3/8"PL	ALUM -6061-T6		12
1			FSP-10-13	TANK BAFFLE 1/8"PL.	ALUM -6061-T6		132
1			FSP-10-14	3/4" COUPLING	ALUM		14
1			FSP-10-15	1/2" COUPLING	ALUM		15
1			FSP-10-16	1" COUPLING	ALUM		16
1			FSP-10-17	TANK SIDE & BOTTOM 1/4"PL.	ALUM -6061-T6		17
1			FSP-10-18	TANK TOP & FRONT 1/4"PL.	ALUM -6061-T6		18
1			FSP-10-19	TANK BACK 1/4"PL.	ALUM -6061-T6		19
1			FSP-10-20	TANK COVER PLATES 1/4"PL.	ALUM -6061-T6		20
2			FSP-10-21	HANDLE ASSEMBLY 1"O.D. TUBE W/CAP	ALUM -6061-T6		21
2			FSP-10-22	HANDLE GUIDE 1 1/8"I.D. TUBE	ALUM -6061-T6		22
2			FSP-10-23	HANDLE BRACKET 3/8" PL.	ALUM -6061-T6		23
2			FSP-10-24	LEG 1 1/4" O.D. TUBE	ALUM -6061-T6		24
2			FSP-10-25	FOOT 1/8"PL.	ALUM -6061-T6		25

REV	DATE	APPD	DESCRIPTION	BY
A	8/98	A/C	GENERAL REVISIONS	CWA

CONTRACT NUMBER DTCG-95-DEC-5028

UNLESS OTHERWISE SPECIFIED:
ALL DIMENSIONS ARE IN INCHES
TOLERANCES: FRACTIONS ±1/32 DECIMALS ±.01 ±.005 ANGLES ±1°

DICHROMA, INCORPORATED
ALEXANDRIA, VIRGINIA
(703) 921-1440

CONSULTANTS

U. S. COAST GUARD
CIVIL ENGINEERING
WASHINGTON, DC

USCG. COMDT G-SEC-2
2100 2ND STREET SW
WASHINGTON, DC 20593-0001

ISSUE

MARK	DATE	DESCRIPTION
01	06/01/01	LV

A/E PROJECT NO: 236
CAD FILE NAME Z1725FSP1001001
DESIGNED BY: RMS
DRAWN BY: JGD
EDITED BY:
CHECKED BY: AJC

SCALE: FULL PLOT SCALE:

SHEET TITLE

G-SEC-2C
WASHINGTON DC

FAST SWEEP POWER PACK

REVIEWED BY:	REVIEWED BY:	REVIEWED BY:
PROJECT ENG	BRANCH CHIEF	G-SEC-2

CHIEF, CIVIL ENG DATE

PROJECT NUMBER	DRAWING NUMBER
98-	1725FSP1001

DISCIPLINE/SHT NO

SHEET 1 OF 4