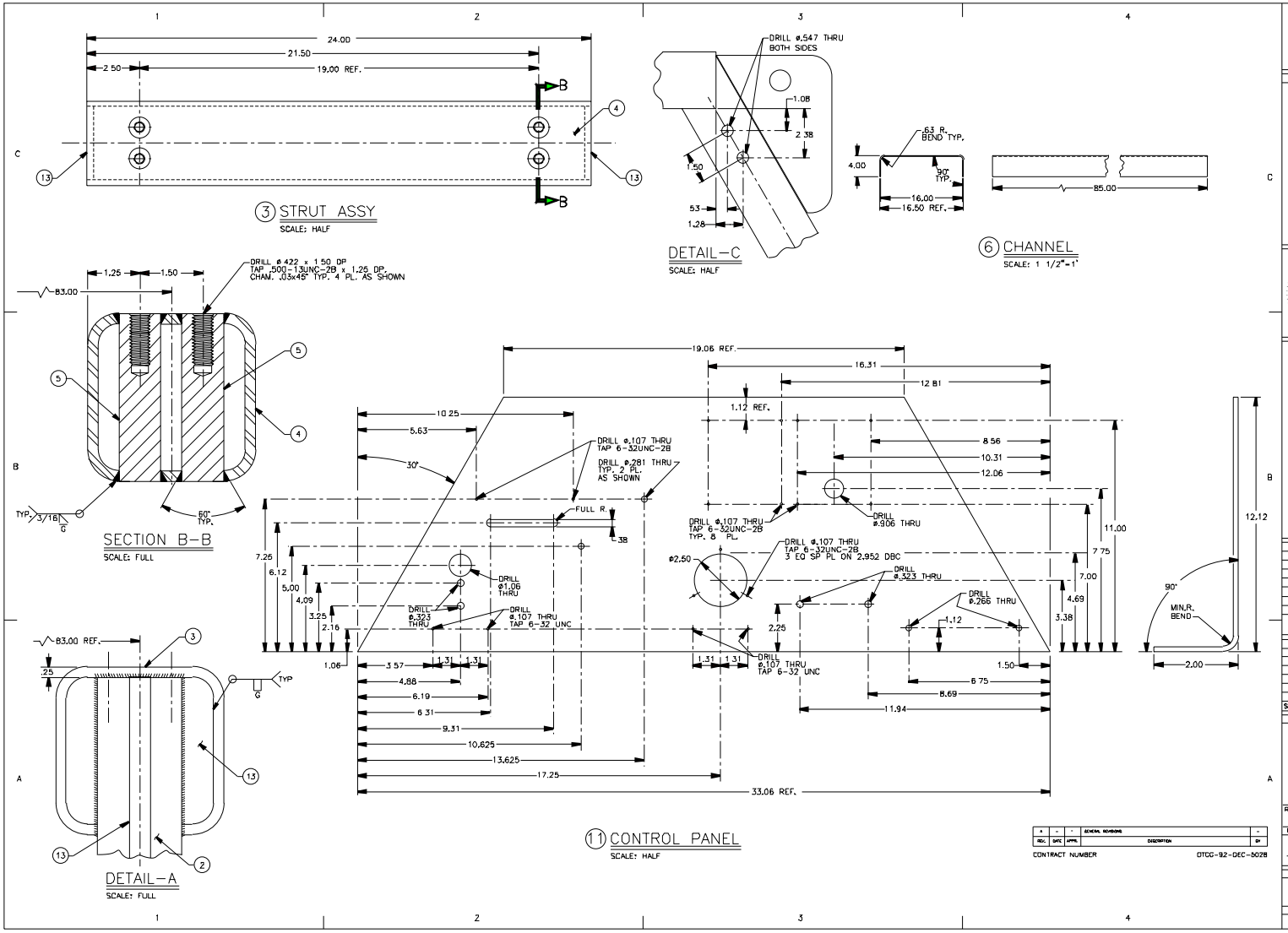

REV.	DATE	APPR.	DESCRIPTION	BY
A	-	-	GENERAL REVISIONS	-

CONTRACT NUMBER DTCG-92-DEC-5028

DICHROMA, INCORPORATED
ALEXANDRIA, VIRGINIA
(703) 921-1440

CONSULTANTS

U. S. COAST GUARD
CIVIL ENGINEERING
WASHINGTON, DC

USCG. COMDT G-SEC-2
2100 2ND STREET SW
WASHINGTON, DC 20593-0001

ISSUE		
01	06/01/01	LV
MARK	DATE	DESCRIPTION

A/E PROJECT NO: 236
CAD FILE NAME Z1725FSR0202002
DESIGNED BY: -
DRAWN BY: -
EDITED BY:
CHECKED BY: -

SCALE: NOTED PLOT SCALE:

SHEET TITLE

G-SEC-2C
WASHINGTON DC

FAST SWEEP FRAME ASSY.

REVIEWED BY: REVIEWED BY: REVIEWED BY:

PROJECT ENG. BRANCH CHIEF G-SEC-2

CHIEF, CIVIL ENG DATE

PROJECT NUMBER 98- DRAWING NUMBER 1725FSR0202

DISCIPLINE/SHT NO

SHEET 2 OF 2