NOTE :

1. APPLICABLE STANDARDS / SPECIFICATIONS:
   A. DOD-STD-00100 D (AR)
   B. MIL-T-31000(I)
2. MATERIAL
   ALUMINIUM
   6061-T651
   .375 THICK
3. BREAK ALL CORNERS AND SHARP EDGES
4. WELD SYMBOLS AMERICAN WELDING SOCIETY NO. A 2.1-86
5. ALL WELD SIZES ARE MINIMUM

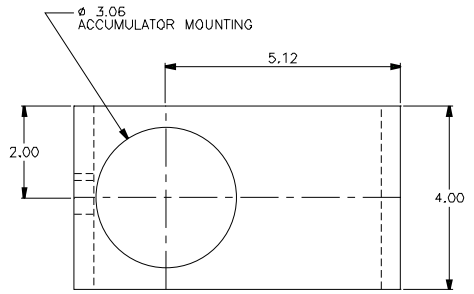

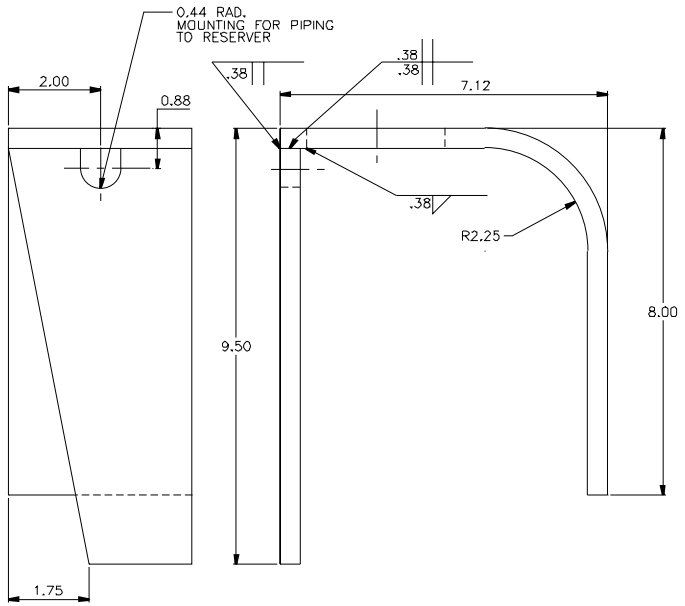

CONTRACT NO.DTCG23-91-C-EC1071
UNLESS OTHERWISE SPECIFIED
ALL DIMENSIONS ARE IN INCHES
TOLERANCES: DIM XX±.06
ANG.

DICHROMA, INCORPORATED
ALEXANDRIA, VIRGINIA
(703) 921-1440

CONSULTANTS

U. S. COAST GUARD
CIVIL ENGINEERING
WASHINGTON, DC

USCG. COMDT G-SEC-2
2100 2ND STREET SW
WASHINGTON, DC 20593-0001

ISSUE		
01	07/17/01	LV
MARK	DATE	DESCRIPTION

A/E PROJECT NO: 254
CAD FILE NAME: Z17660001
DESIGNED BY: M.P.C.
DRAWN BY: PAT
EDITED BY:
CHECKED BY:

SCALE 1" = 1'-0" PLOT SCALE

SHEET TITLE

G-SEC-2C
WASHINGTON DC

STAND, ACCUMULATOR

REVIEWED BY:	REVIEWED BY:	REVIEWED BY:
PROJECT ENG.	BRANCH CHIEF	G-ECV-30
CHIEF CIVIL ENG		12/18/91 DATE

PROJECT NUMBER	DRAWING NUMBER
	17660
DISCIPLINE/SHT NO	
98-	SHEET 1 OF 1