NOTES:

1. APPLICABLE STANDARDS/SPECIFICATIONS:
   A. DOD-STD-00100D(AR)
   B. MIL-T-31000(I)

2. MATERIAL:
   ALUMINUM PLATE
   6061 T651 .250 THICK

3. BREAK ALL CORNERS AND SHARP EDGES

4. X SYMBOL MEANS AMOUNT OF TIMES OR PLACES USED.

| LIST OF MATERIALS | | | | |
|---|---|---|---|---|
| ITEM NO. | NO. REQD. | DESCRIPTION | PART NO. | COMPANY |
| 1 | 1 | PLATE | 17675 | |
| 2 | 3 | 8mmx1.25x20mm LG | | SOC.HD. CAP SCR. |
| 3 | 3 | 8mm NOM. | | LOCKWASHER |
| 4 | 2 | 7/16-14x1 1/4 LG | | SOC.HD. CAP SCR. |
| 5 | 2 | 7/16 NOM. | | LOCKWASHER |
| 6 | 2 | 7/16 14 | | HEX NUT |
| | | | | |

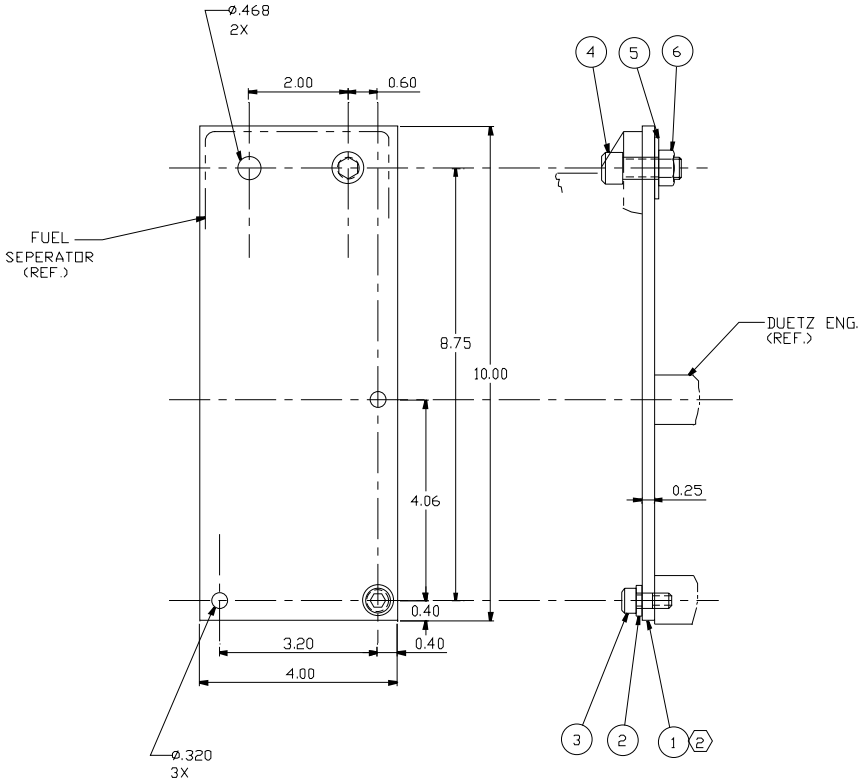


CONTRACT NO.DTCG23-91-C-EC1071

UNLESS OTHERWISE SPECIFIED:
ALL DIMENSIONS ARE IN INCHES.
TOLERANCES: DIM. XX±.03
ANG.

DICHROMA, INCORPORATED
ALEXANDRIA, VIRGINIA
(703) 921-1440

CONSULTANTS

U. S. COAST GUARD
CIVIL ENGINEERING
WASHINGTON, DC

USCG. COMDT G-SEC-2
2100 2ND STREET SW
WASHINGTON, DC 20593-0001

| ISSUE | | |
|---|---|---|
| 01 | 07/17/01 | LV |
| MARK | DATE | DESCRIPTION |

A/E PROJECT NO: 254
CAD FILE NAME: Z17675001
DESIGNED BY: M.P.C.
DRAWN BY: DCS
EDITED BY:
CHECKED BY:

SCALE: FULL PLOT SCALE:

SHEET TITLE

G-SEC-2C
WASHINGTON DC

PLATE, FUEL SEPARATOR

| REVIEWED BY: | REVIEWED BY: | REVIEWED BY: |
|---|---|---|
| PROJECT ENG. | BRANCH CHIEF | G-ECV-3D |
| | CHIEF, CIVIL ENG | DATE |

| PROJECT NUMBER | DRAWING NUMBER |
|---|---|
| | 17675 |
| DISCIPLINE/SHT NO | |
| 98- | SHEET 1 OF 1 |