NOTES:

1. TERMINOLOGY USED ON SHEET THREE (ONLY) IS IN REFERENCE TO THE BOOM REEL FACING THE CONTROLS.

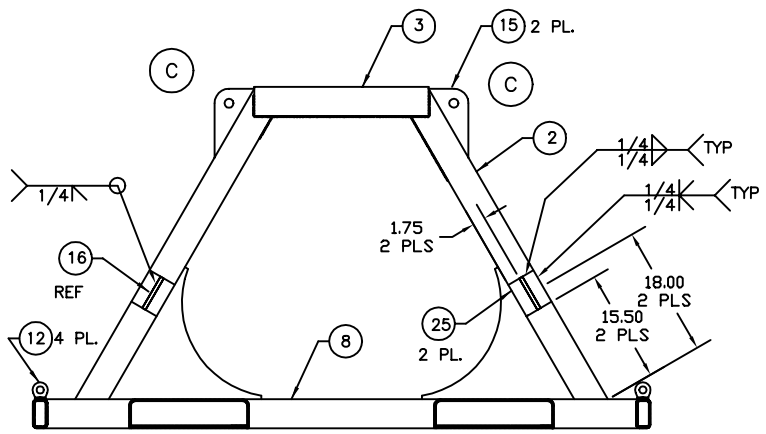

SECTION G–G

A

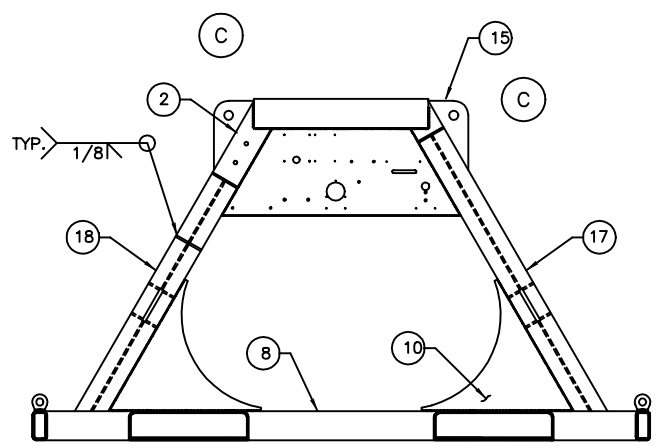

SECTION F–F

A

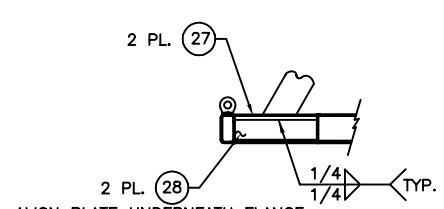

ALIGN PLATE UNDERNEATH FLANGE OF THE TEE (SEE ELEVATION OF FRAME ASSY. ON SHT 1.

SECTION H–H

A

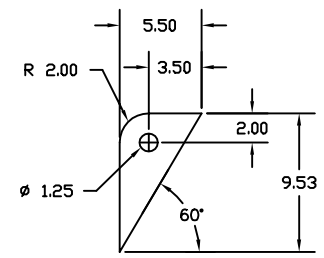

15 LIFTING GUSSET

SCALE: 1"=1/2"

A

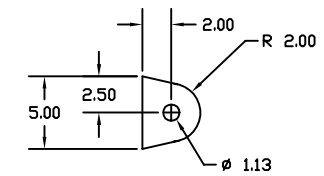

16 PADEYE

SCALE: 1"=1/2"

A

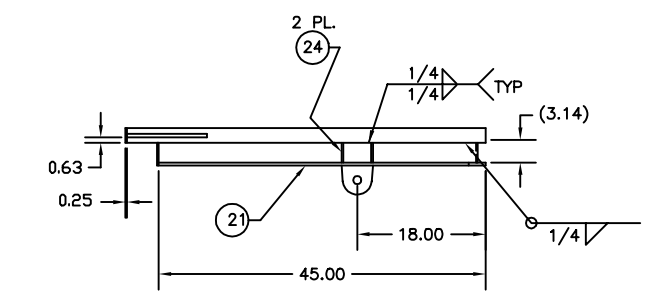

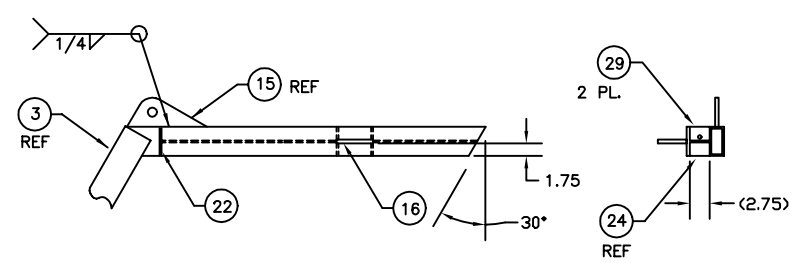

17 FRONT LEFT SUB–ASSY

SCALE: 1 1/2"=1"

NOTE: ITEM 3 NOT SHOWN IN TOP VIEW FOR CLARITY

A B C

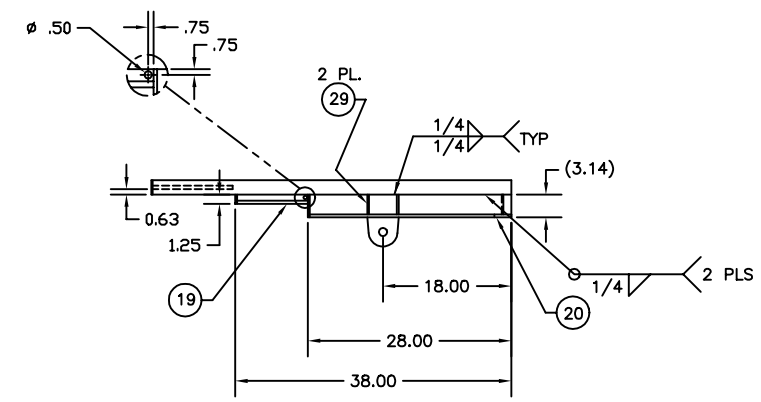

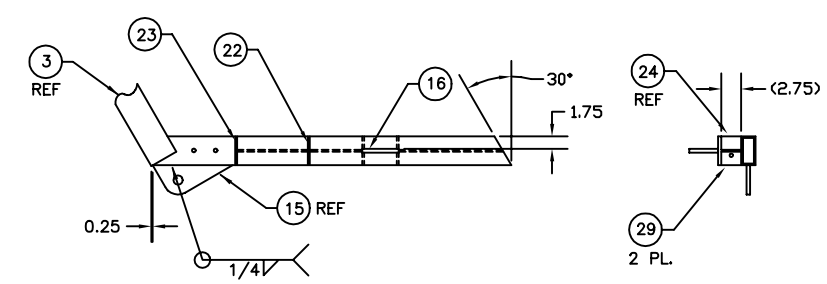

18 FRONT RIGHT SUB–ASSY

SCALE: 1 1/2"=1"

NOTE: ITEM 3 NOT SHOWN IN TOP VIEW FOR CLARITY

A B C

D

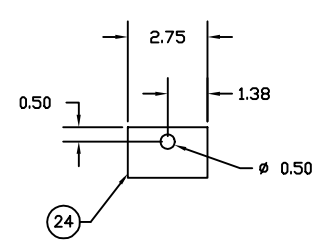

29 TEE STIFFENER

SCALE: 6"=1"

C

DRAWING NUMBER	REV.
172311	D
SCALE: 1"=1'	SHEET 3 OF 3