REVISIONS				
ZONE	LTR	DESCRIPTION	DATE	APPROVED
	A	REMOVED OPTIONAL CONST., ADDED 2.20 MAX DIM'N	2-26-92	

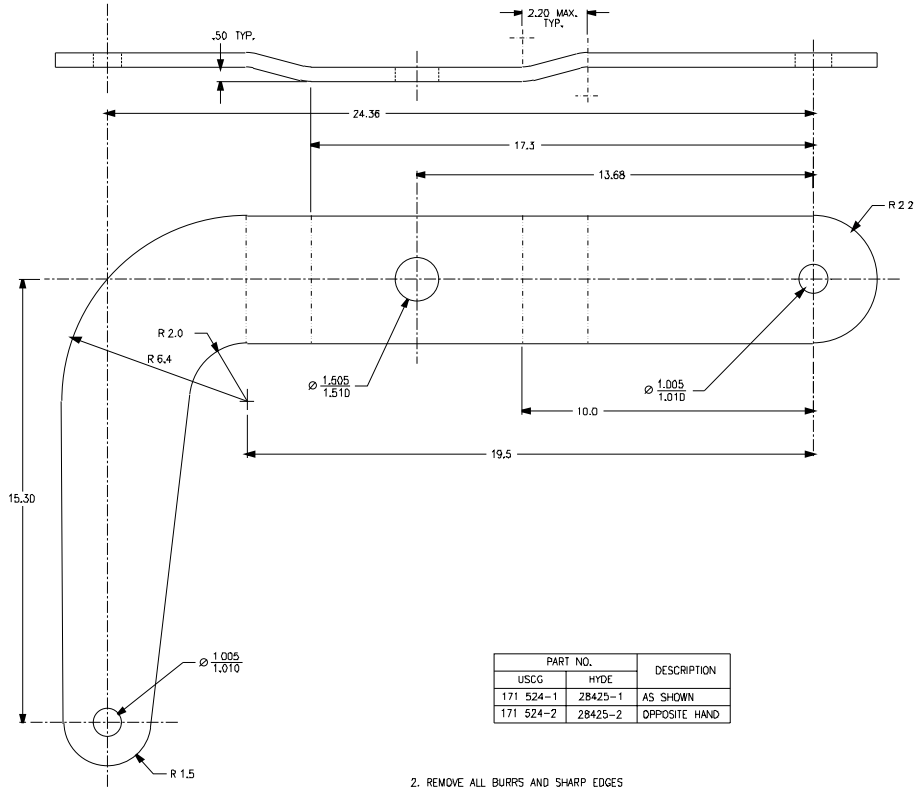

PART NO.		DESCRIPTION
USCG	HYDE	
171 524-1	28425-1	AS SHOWN
171 524-2	28425-2	OPPOSITE HAND

2. REMOVE ALL BURRS AND SHARP EDGES
1. MATERIAL - ALUMINUM PLATE - .50 THICK - 6061-T651

CONTRACT NUMBER DTCG25-91-C-EC1067

TOLERANCES UNLESS OTHERWISE SPECIFIED:
.X ±12" .XXX ±005"
.XX ±015" .XXXX ±0005"
ANGLES .5°
RADII .03"
FINISH 125 RMS

DICHROMA, INCORPORATED
ALEXANDRIA, VIRGINIA
(703) 971-1440

CONSULTANTS

U. S. COAST GUARD
CIVIL ENGINEERING
WASHINGTON, DC

USCG, COMDT G-SEC-2
2100 2ND STREET SW
WASHINGTON, DC 20593-0001

ISSUE		
01	06/01/91	LV
MARK	DATE	DESCRIPTION

A/E PROJECT NO. 236
CAD FILE NAME: 2171574001
DESIGNED BY: DAE
DRAWN BY: DAE
EDITED BY: LV
CHECKED BY: LWB

SCALE: 1/2"=1'-0" PLOT SCALE:

SHEET TITLE
CLAMP - DAVIT SUPPORT/OUTRIGGER
G-SEC-2C
WASHINGTON DC

ARM - INNER

REVIEWED BY:	REVIEWED BY:	REVIEWED BY:
JN		
PROJECT ENG.	BRANCH CHIEF	G-SEC-2
CHIEF, CIVIL ENG		10/22/91 DATE

PROJECT NUMBER	DRAWING NUMBER
98-	171 574
DISCIPLINE/SHT NO	SHEET 1 OF 1