REVISIONS				
ZONE	LTR	DESCRIPTION	DATE	APPROVED
	A	CHANGED BOLT PATTERN, ADDED .8 DIA. HOLE DAE	5-8-92	

FIG NO	DESCRIPTION	QTY	MATERIAL	SPEC.	DWG/IDENT.NO.
1	PLATE – 1.00 THICK	1	ALUMINUM	6061-T651	SEE DETAIL
2	SHEET – .19 THICK	2	ALUMINUM	6061	SEE DETAIL
3	SELF LKG INSERT – 5/8 -11 UNC	6	STNLS STL	McMASTER CARR #90247A017	

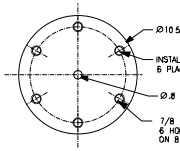

DETAIL – PC 1

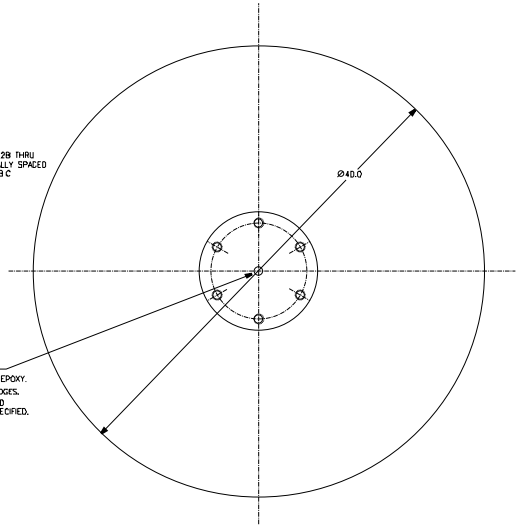

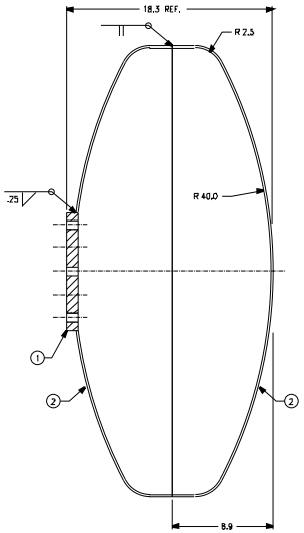

4. TOLERANCE – .X = +/-.12
3 FILL WITH CLOSED CELL FOAM FOR FLOTATION SEAL HOLE WITH EPOXY.
2. REMOVE ALL BURRS AND SHARP EDGES.
1 ALL WELDS TO BE CONTINUOUS AND WATERTIGHT UNLESS OTHERWISE SPECIFIED.

ALL WELDS SHALL:

1. BE PERFORMED BY WELDER(S) AND USING PROCEDURES CERTIFICATED AS QUALIFIED PER MIL-STD-248 AND MIL-STD-1689A, SECTION 4.
2. MEET THE WELDING REQUIREMENTS OF MIL-STD-1688A, SECTION 13.
3. ADHERE TO THE WORKMANSHIP REQUIREMENTS OF MIL-STD-1689A, SECTION 14.

CONTRACT NUMBER DTCG23-91-C-EC1067

TOLERANCES UNLESS OTHERWISE SPECIFIED:
.X ±12" XXX ±005"
.XX ±015" XXXX ±0005"
ANGLES .5°
RADII .03"
FINISH 125 RMS

DICHROMA, INCORPORATED
ALEXANDRIA, VIRGINIA
(703) 821-1440

CONSULTANTS

U. S. COAST GUARD
CIVIL ENGINEERING
WASHINGTON, DC

USCG, COMDT G-SEC-2
2100 2ND STREET SW
WASHINGTON, DC 20593-0001

ISSUE		
01	06/07/01	LV
MARK	DATE	DESCRIPTION

A/E PROJECT NO: 236
CAD FILE NAME: Z171B24001
DESIGNED BY: DAE
DRAWN BY: DAE
EDITED BY: LV
CHECKED BY: LWB

SCALE: 1/4 PLOT SCALE:

SHEET TITLE
CLAMP/OUTRIGGER/FLOAT
G-SEC-2C
WASHINGTON DC

FLOAT ASSY – WELDMENT

REVIEWED BY: JM REVIEWED BY: REVIEWED BY:
PROJECT ENG BRANCH CHIEF G-SEC-2
CHIEF, CIVIL ENG 03/17/92 DATE

PROJECT NUMBER 98– DRAWING NUMBER 171 624
DISCIPLINE/SHT NO
SHEET 1 OF 1